REPAIR SOUTH POST RESERVOIRS

Fort McCoy, Wisconsin

PHASE OF WORK DESCRIPTION:

PHASE 1: CONSTRUCT NEW TANK 5025

1. THE TWO EXISTING TANKS WILL REMAIN IN SERVICE DURING THE CONSTRUCTION OF NEW TANK 5025.
2. TEMPORARY CONSTRUCTION SITE FENCING SHALL BE INSTALLED PRIOR TO REMOVAL OF EXISTING FENCING SO THAT A SECURE PERIMETER IS PRESENT AT ALL TIMES AROUND THE EXISTING TANKS AND NEW TANK CONSTRUCTION.
3. A TEMPORARY OUTAGE SHALL BE SCHEDULED TO ALLOW FOR CONNECTION OF NEW WATER MAIN TO EXISTING WATER MAIN BETWEEN WELL NO. 31 AND THE EXISTING TANKS.
4. PRIOR TO NEW TANK 5025 BEING PUT ONLINE, THE TANK DRAIN STRUCTURE SHALL BE COMPLETELY CONSTRUCTED AND CONNECTED TO NEW TANK 5025.
5. SITE SHALL BE TEMPORARILY GRADED THROUGH THE GRAVEL LAYER TO DRAIN AWAY FROM THE TANKS WITH NO STANDING WATER WITHIN 50 FEET OF ANY OF THE TANKS.
6. NEW TANK 5025 SHALL BE TESTED AND FULLY OPERATIONAL PRIOR TO THE REMOVAL OF EXISTING TANK 5024.

PHASE 2A: REMOVE EXISTING TANK 5024

1. REMOVE EXISTING TANK 5024 INCLUDING WATER MAIN TO INDICATED LOCATION ON SHEET C1.1.
2. REMOVE RIP RAP FOR EXISTING TANK 5024 OVERFLOW AND DRAIN DISCHARGES; MAINTAIN RIP RAP FOR EXISTING TANK 5025 OVERFLOW AND DRAIN DISCHARGES.

PHASE 2B: CONSTRUCT NEW TANK 5024

1. NEW TANK 5025 AND EXISTING TANK 5025 WILL REMAIN IN SERVICE DURING THE CONSTRUCTION OF NEW TANK 5024.
2. TEMPORARY CONSTRUCTION SITE FENCING SHALL BE INSTALLED PRIOR TO REMOVAL OF EXISTING FENCING SO THAT A SECURE PERIMETER IS PRESENT AT ALL TIMES AROUND THE EXISTING TANKS AND NEW TANK CONSTRUCTION.
3. FOLLOWING THE CONSTRUCTION OF NEW TANK 5024, THE SITE SHALL BE FINISH GRADED AND THE CONCRETE PAD SHALL BE POURED.

PHASE 3: REMOVE EXISTING TANK 5025

1. REMOVE EXISTING TANK 5025 INCLUDING WATER MAIN TO INDICATED LOCATION ON SHEET C1.2.
2. REMOVE RIP RAP FOR EXISTING TANK 2025 OVERFLOW AND DRAIN DISCHARGES.

GENERAL NOTES:

1. THE CONTRACTOR IS RESPONSIBLE TO OBTAIN ALL PERMITS, LICENSES AND CERTIFICATIONS NEEDED TO PERFORM THE WORK AT THE CONTRACTOR'S EXPENSE.
2. ALL EQUIPMENT INSTALLATIONS MUST BE IN ACCORDANCE WITH THE MANUFACTURER'S PUBLISHED DATA AND RECOMMENDATIONS.
3. CONTRACTOR MUST PERFORM ALL WORK IN ACCORDANCE WITH THE MOST RECENT EDITION OF EM 385–1–1 SAFETY AND HEALTH REQUIREMENTS MANUAL (2024 EDITION)
4. CONTRACTOR SHALL OBTAIN SPECIFIC UTILITY REQUIREMENTS FOR EACH UTILITY. EACH UTILITY MAY REQUIRE ADDITIONAL ADVANCE NOTIFICATION.
5. CONTRACTOR IS RESPONSIBLE TO OBTAIN UTILITY LOCATES PRIOR TO THE START OF EXCAVATION OPERATIONS AND MAINTAIN UTILITY MARKINGS DURING CONSTRUCTION.
6. CONTRACTOR IS RESPONSIBLE TO VERIFY ALL EXISTING UTILITIES. CONTRACTOR IS RESPONSIBLE TO VERIFY ALL EXISTING SITE CONDITIONS. GOVERNMENT INFORMATION, DATA AND DRAWINGS ARE FOR REFERENCE ONLY, NOT FOR CONSTRUCTION, AND DO NOT CONTAIN ALL EXISTING UTILITIES AND SITE CONDITIONS. CONTRACTOR MUST NOT REPLY UPON GOVERNMENT INFORMATION, DATA AND DRAWINGS AS SUBSTITUTE FOR CONTRACTOR VERIFICATION.
7. SCALES SHOWN APPLY ONLY WHEN DRAWINGS ARE PRINTED ON 22" X 34" PAPER. SCALES ARE HALF SIZED WHEN PRINTED ON 11" X 17" PAPER.
8. ALL MATERIALS, LABOR, EQUIPMENT AND WORK MUST BE IN ACCORDANCE WITH SPECIFICATIONS, STANDARDIZED CONSTRUCTION METHODS AND PRACTICES, MANUFACTURER'S PUBLISHED DATA AND RECOMMENDATIONS, AND ALL FEDERAL, STATE, AND LOCAL LAWS, REGULATIONS, STATUES, AND CODES.
9. THE CONTRACTOR MUST PROVIDE WRITTEN NOTIFICATION TO COR WITHIN THREE DAYS OF DISCOVERING DISCREPANCIES BETWEEN EXISTING SITE CONDITIONS, DRAWINGS, SPECIFICATIONS, AND CONTRACT DOCUMENTS. THE CONTRACTOR MUST PROVIDE A WRITTEN REQUEST FOR CLARIFICATION TO ADDRESS EACH DISCREPANCY.
10. THE GOVERNMENT IS NOT RESPONSIBLE FOR THE CONTRACTOR'S CONSTRUCTION PRACTICES, MEANS AND METHODS. THE CONTRACTOR MUST PROVIDE A WRITTEN REQUEST TO COR A MINIMUM OF SEVEN CALENDAR DAYS PRIOR TO THE START OF CONSTRUCTION FOR APPROVAL OF ANY DEVIATIONS FROM STANDARDIZED CONSTRUCTION PRACTICES, MEANS AND METHODS WHETHER STATED OR IMPLIED ON DRAWINGS AND IN SPECIFICATIONS.
11. EQUIPMENT, MATERIALS AND MANUFACTURERS LISTED IN THESE DRAWINGS MAY BE SUBSTITUTED FOR EQUAL PRODUCTS IN COMPLIANCE WITH SPECIFICATIONS AND FEDERAL PURCHASING REQUIREMENTS.

SHEET INDEX TABLE

SHEET NO.	SHEET TITLE
G0.1	COVER SHEET / INDEX
G0.2	LOCATION AND GENERAL NOTES
C1.1	EXISTING SITE PLAN
C1.2	EROSION CONTROL PLAN
C1.3	REMOVALS PLAN - PHASE 1
C1.4	SITE PLAN PHASE 1
C1.5	GRADING PLAN PHASE 1
C1.6	REMOVALS PLAN PHASE 2A
C1.7	SITE PLAN PHASE 2B
C1.8	REMOVALS PLAN PHASE 3
C1.9	SITE PLAN AND JOINTING PLAN PHASE 3
C1.10	GRADING PLAN PHASE 3
C1.11	STAKING PLAN
C5.1	CONSTRUCTION DETAILS
C5.2	CONSTRUCTION DETAILS
C5.3	CONSTRUCTION DETAILS
C5.4	CONSTRUCTION DETAILS
S0.1	DEMOLITION PLAN AND DETAILS
S0.2	GENERAL STRUCTURAL NOTES
S1.1	FOUNDATION PLAN AND DETAILS
P1.1	NEW TANK 01 (WEST) ORIENTATION PLAN PHASE 1
P1.2	NEW TANK 02 (EAST) ORIENTATION PLAN PHASE 2
P1.3	PROCESS SECTIONS
P5.1	PROCESS DETAILS
P5.2	PROCESS DETAILS
E0.1	ELECTRICAL SYMBOLS ABBREVIATIONS AND NOTES
E1.1	ELECTRICAL OVERALL SITE PLAN PHASE 1
E1.2	ELECTRICAL SITE PLAN PHASE 1
E1.3	ELECTRICAL DEMOLITION SITE PLAN PHASE 2A
E1.4	ELECTRICAL SITE PLAN PHASE 2B
E1.5	ELECTRICAL DEMOLITION SITE PLAN PHASE 3
E1.6	ELECTRICAL OVERALL SITE DEMOLITION PLAN PHASE 3
E1.7	ELECTRICAL RESERVOIR POWER PLAN
E5.1	ELECTRICAL DETAILS
E5.2	ELECTRICAL DETAILS
E6.1	ELECTRICAL ONE LINE DIAGRAMS
EC1.1	CATHODIC PROTECTION SITE PLAN
EC5.1	CATHODIC PROTECTION DETAILS
EC5.2	CATHODIC PROTECTION DETAILS
EC5.3	CATHODIC PROTECTION DETAILS
EC5.4	CATHODIC PROTECTION DETAILS
T1.1	TELECOMMUNICATIONS SITE DEMOLITION PLAN PHASE 1
T1.2	TELECOMMUNICATIONS OVERALL SITE PLAN PHASE 1
T1.3	TELECOMMUNICATIONS SITE DEMOLITION PLAN PHASE 2A
T1.4	TELECOMMUNICATIONS SITE PLAN PHASE 2B
T5.1	TELECOMMUNICATIONS DETAILS

DPW
FORT MCCOY, WI

MARK	MOD REQUEST # - DESCRIPTION	DATE	MOD #

SEH – TEPA ES JV, LLC
PHONE: 920.380.2830
329 JAY ST, SUITE 301
LA CROSSE, WI 54601

FORT McCOY
REPAIR SOUTH POST
RESERVOIRS
FORT McCOY, WISCONSIN

Designed by: JNN	Date: 3/5/2026
Dwn by: KAK	Ckd by: MN
Reviewed by:	Rev.
Submitted by: DPW	Work Order No 1612
	Project Number 1503

FORT McCOY
DIRECTORATE OF PUBLIC WORKS
2171 SOUTH 8TH AVE.
FORT MC COY, WI 54656

COVER SHEET / INDEX

SHEET NUMBER:

G0.1

GENERAL NOTES:

1. HORIZONTAL POSITIONS SHOWN ON THIS PLAN ARE WISCONSIN COUNTY COORDINATES, MONROE COUNTY, NAD83 (2011). ELEVATIONS SHOWN ON THIS PLAN ARE REFERENCED TO VERTICAL DATUM NAVD88.
2. THE LOCATION OF EXISTING AND PROPOSED UTILITY INSTALLATIONS AS SHOWN ON THE PLANS IS APPROXIMATE. THERE MAY BE OTHER UTILITY INSTALLATIONS WITHIN THE PROJECT AREA THAT ARE NOT SHOWN.
3. THE EXACT LOCATION OF THE EROSION CONTROL DEVICES SHALL BE DETERMINED IN THE FIELD.
4. DISTURBED AREAS ARE TO BE 4–INCH SALVAGED TOPSOILED/TOPSOILED AND COVERED IN EROSION MAT CLASS 1 TYPE B UNLESS OTHERWISE SPECIFIED.
5. SILT FENCE IS TO BE PLACED AS SHOWN ON THE PLANS OR AS DIRECTED BY THE COR, AND IN PLACE PRIOR TO GROUND DISTURBANCE.
6. CONSTRUCTION LIMITS SHALL COINCIDE WITH THE SILT FENCE AS SHOWN ON THE PLANS. NO DISTURBANCE IS TO OCCUR OUTSIDE OF THE SILT FENCE.
7. REFERENCE DRAWINGS ARE INTENDED TO PROVIDE CONSTRUCTION AND MATERIALS REQUIREMENTS. ANY INFORMATION REGARDING SPECIFIC PAY ITEMS AND PAYMENT DO NOT APPLY.
8. ANY TREES REMOVED FROM THE SITE NEED TO BE CHIPPED OR TAKEN TO STUMP DUMP IN TA B31.

PROJECT LOCATION

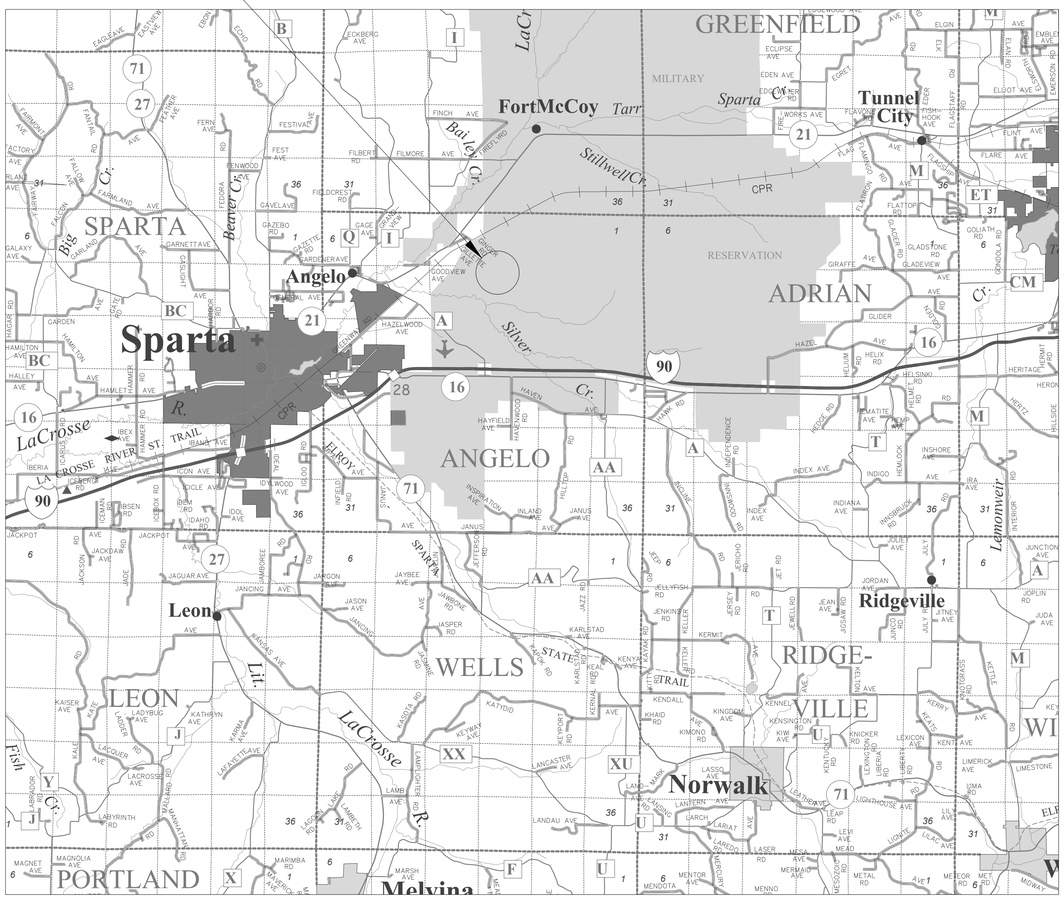

N

1 LOCATION MAP

PROJECT LOCATION

2 SITE MAP

DPW
FORT MCCOY, WI

MARK	MOD REQUEST # – DESCRIPTION	DATE	MOD #

SEH – TEPA ES JV, LLC
PHONE: 920.380.2830
329 JAY ST, SUITE 301
LA CROSSE, WI 54601

FORT McCOY
REPAIR SOUTH POST
RESERVOIRS
FORT McCOY, WISCONSIN

FORT McCOY
DIRECTORATE OF PUBLIC WORKS
2171 SOUTH 8TH AVE
FORT MC COY, WI 54656

LOCATION
AND
GENERAL NOTES

Designed by:	Date:
SFA	3/5/2026
Dwn by:	Ckd by:	Rev.
SFA	EDH	
Reviewed by:	Work Order No
DMC	1612
Submitted by:	Project Number
DPW	1503

SHEET NUMBER:
G0.2
SHEET 2 of 46

Plot date: 04/03/2026

LEGEND

- AUTO SPRINKLER
- CATCH BASIN
- COMMUNICATION JUNCTION BOX
- FLARED END SECTION
- ELECTRIC BOX
- ELECTRIC METER
- HANDHOLE
- HYDRANT
- LIGHT POLE
- POST INDICATOR VALVE
- POWER POLE
- POWER POLE ANCHOR
- ROOF DRAIN
- SANITARY MANHOLE
- SIGN
- STORM MANHOLE
- FENCE
- COMMUNICATIONS
- GAS
- OVERHEAD WIRES
- UNDERGROUND ELECTRIC
- SANITARY SEWER
- STORM SEWER
- WATER MAIN
- RETAINING WALLS
- TREE LINE
- ASPHALT EDGE
- GRAVEL EDGE
- CONTOUR MAJOR
- CONTOUR MINOR

PIPE LEGEND

- RCP REINFORCED CONCRETE PIPE
- CMP CORRUGATED METAL PIPE
- PVC POLYVINYL CHLORIDE PIPE
- DIP DUCTILE IRON PIPE
- CPP CORRUGATED PLASTIC PIPE
- HDPE HIGH DENSITY POLYPROPYLENE PIPE

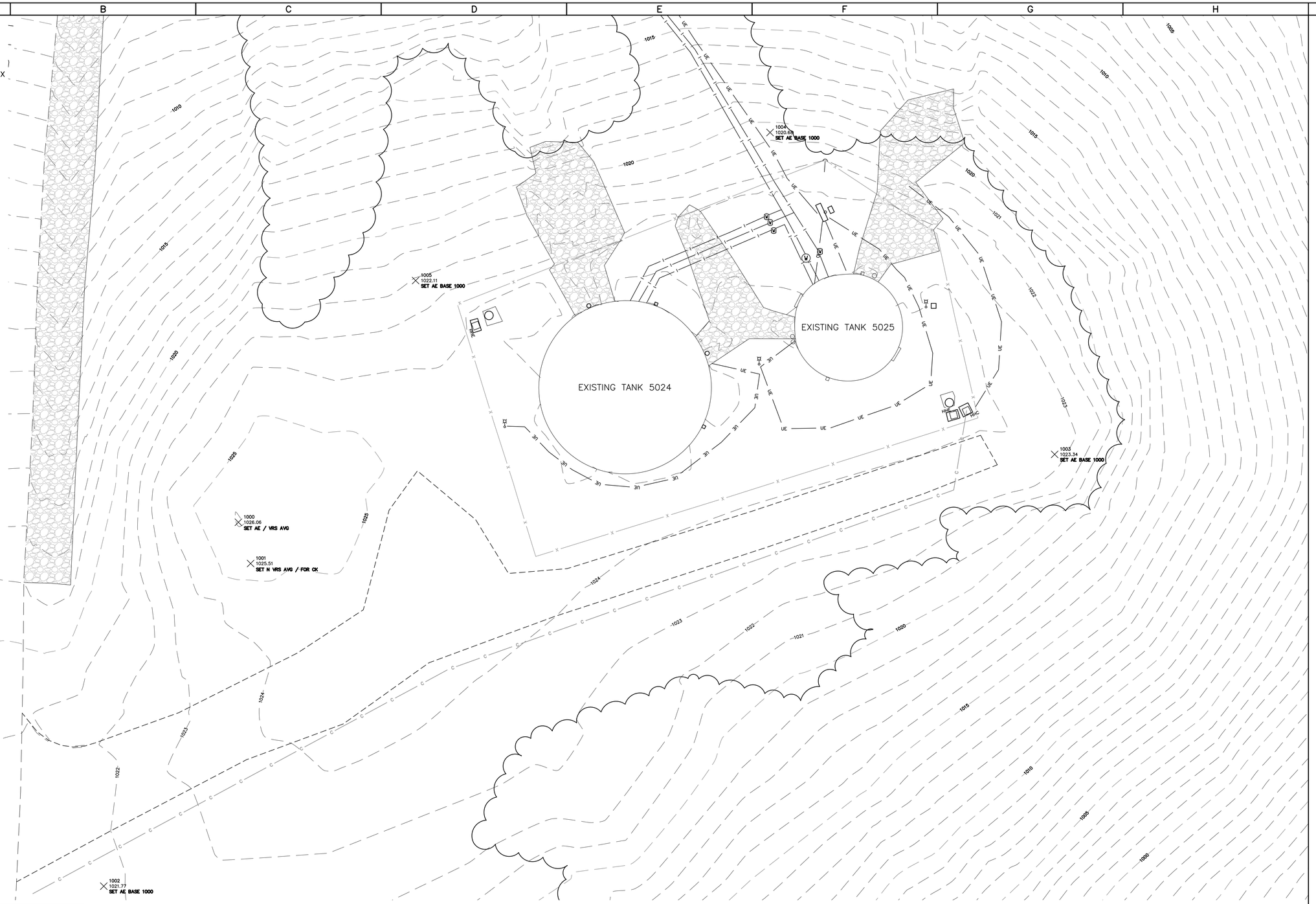

CONTROL SCHEDULE

POINT NO.	NORTHING	EASTING	ELEVATION	DESCRIPTION
1000	389550.6270	649252.4270	1026.059	SET AE / VRS AVG
1001	389542.2190	649254.8990	1025.510	SET N VRS AVG / FOR CK
1002	389476.4630	649224.9690	1021.769	SET AE BASE 1000
1003	389564.4590	649418.8450	1023.336	SET AE BASE 1000
1004	389630.0590	649360.8180	1020.684	SET AE BASE 1000
1005	389599.8840	649288.5470	1022.108	SET AE BASE 1000
1006	389745.7910	649222.1920	987.413	SET AE BASE 1000

N

1 EXISTING SITE PLAN

Scale: 1:10

DPW
FORT MCCOY, WI

MARK	MOD REQUEST # – DESCRIPTION	DATE	MOD #

SEH – TEPA ES JV, LLC
PHONE: 920.380.2830
329 JAY ST, SUITE 301
LA CROSSE, WI 54601

FORT McCOY
REPAIR SOUTH POST
RESERVOIRS
FORT McCOY, WISCONSIN

Designed by: SFA
Dwn by: SFA
Ckd by: EDH
Reviewed by: ###
Submitted by: DPW
Date: 3/5/2026
Rev.
Work Order No 1612
Project Number 1503

FORT McCOY
DIRECTORATE OF PUBLIC WORKS
2171 SOUTH 8TH AVE.
FORT MC COY, WI 54636

EXISTING SITE PLAN

SHEET NUMBER:
C1.1
SHEET 3 of 46

Plot date: 04/03/2026

KEYNOTES:

1. SILT FENCE
2. EROSION CONTROL MAT (URBAN, CLASS I, TYPE B)
3. EROSION CONTROL MAT (URBAN, CLASS I, TYPE B) ON ALL DISTURBED SOIL ADJACENT TO RIPRAP CHANNEL
4. BIOROLL
5. RIPRAP (WISDOT MEDIUM GRADE) CHANNEL FROM ELEVATION 1014 TO 965 (C5.1/5)
6. ROCK CONSTRUCTION ENTRANCE
7. 20' CLEAR ZONE FROM PROPOSED FENCE

EROSION CONTROL NOTES:

1. POST WDNR CERTIFICATE OF PERMIT COVERAGE ON SITE AND MAINTAIN UNTIL CONSTRUCTION ACTIVITIES HAVE CEASED, THE SITE IS STABILIZED, AND A NOTICE OF TERMINATION IS FILED WITH WDNR.
2. KEEP A COPY OF THE CURRENT EROSION CONTROL PLAN ON SITE THROUGHOUT THE DURATION OF THE PROJECT.
3. SUBMIT PLAN REVISIONS OR AMENDMENTS TO THE WDNR AT LEAST 5 DAYS PRIOR TO FIELD IMPLEMENTATION.
4. CONTRACTOR IS RESPONSIBLE FOR ROUTINE SITE INSPECTIONS AT LEAST ONCE EVERY 7 DAYS AND WITHIN 24 HOURS AFTER A RAINFALL EVENT OF 0.5 INCHES OR GREATER. KEEP INSPECTION REPORTS ON-SITE AND MAKE THEM AVAILABLE UPON REQUEST.
5. INSPECT AND MAINTAIN ALL INSTALLED EROSION CONTROL PRACTICES UNTIL THE CONTRIBUTING DRAINAGE AREA HAS BEEN STABILIZED.
6. EROSION CONTROL MEASURES, INCLUDING EROSION MAT SHALL BE INSTALLED AS FINAL GRADE HAS BEEN ESTABLISHED DURING EACH PHASE OF CONSTRUCTION.
7. INSTALL PERIMETER EROSION CONTROLS AND ROCK TRACKING PAD CONSTRUCTION ENTRANCE(S) PRIOR TO ANY LAND-DISTURBING ACTIVITIES, INCLUDING CLEARING AND GRUBBING. USE WDNR TECHNICAL STANDARD STONE TRACKING PAD AND TIRE WASHING #1057 FOR ROCK CONSTRUCTION ENTRANCE(S).
8. INSTALL AND MAINTAIN SILT FENCING PER WDNR TECHNICAL STANDARD SILT FENCE #1056. REMOVE SEDIMENT FROM BEHIND SILT FENCES AND SEDIMENT BARRIERS BEFORE SEDIMENT REACHES A DEPTH THAT IS EQUAL TO ONE-HALF OF THE FENCE AND/OR BARRIER HEIGHT.
9. REPAIR BREAKS AND GAPS IN SILT FENCES AND BARRIERS IMMEDIATELY.
10. IMMEDIATELY STABILIZE STOCKPILES AND SURROUND STOCKPILES AS NEEDED WITH SILT FENCE OR OTHER PERIMETER CONTROL IF STOCKPILES WILL REMAIN INACTIVE FOR 7 DAYS OR LONGER.
11. IMMEDIATELY STABILIZE ALL DISTURBED AREAS THAT WILL REMAIN INACTIVE FOR 14 DAYS OR LONGER. BETWEEN SEPTEMBER 15 AND OCTOBER 15: STABILIZE WITH MULCH, TACKIFIER, AND A PERENNIAL SEED MIXED WITH WINTER WHEAT, ANNUAL OATS, OR ANNUAL RYE, AS APPROPRIATE FOR REGION AND SOIL TYPE OCTOBER 15 THROUGH COLD WEATHER: STABILIZE WITH A POLYMER AND DORMANT SEED MIX, AS APPROPRIATE FOR REGION AND SOIL TYPE.
12. STABILIZE AREAS OF FINAL GRADING WITHIN 7 DAYS OF REACHING FINAL GRADE.
13. SWEEP/CLEAN UP ALL SEDIMENT/TRASH THAT MOVES OFF-SITE DUE TO CONSTRUCTION ACTIVITY OR STORM EVENTS BEFORE THE END OF THE SAME WORKDAY OR AS DIRECTED BY THE ENGINEER. SEPARATE SWEPT MATERIALS (SOILS AND TRASH) AND DISPOSE OF APPROPRIATELY.
14. THE CONTRACTOR IS RESPONSIBLE FOR CONTROLLING DUST PER WDNR TECHNICAL STANDARD DUST CONTROL ON CONSTRUCTION SITES # 1068.
15. PROPERLY DISPOSE OF ALL WASTE AND UNUSED BUILDING MATERIALS (INCLUDING GARBAGE, DEBRIS, CLEANING WASTES, OR OTHER CONSTRUCTION MATERIALS) AND DO NOT ALLOW THESE MATERIALS TO BE CARRIED BY RUNOFF INTO THE RECEIVING CHANNEL.
16. COORDINATE WITH THE ENGINEER TO UPDATE THE LAND DISTURBANCE PERMIT TO INDICATE THE ANTICIPATED OR LIKELY DISPOSAL LOCATIONS FOR ANY EXCAVATED SOILS OR CONSTRUCTION DEBRIS THAT WILL BE HAULED OFF-SITE FOR DISPOSAL. THE DEPOSITED OR STOCKPILED MATERIAL NEEDS TO INCLUDE PERIMETER SEDIMENT CONTROL MEASURES (SUCH AS SILT FENCE, HAY BALES, FILTER SOCKS, OR COMPACTED EARTHEN BERMS).
17. MAKE PROVISIONS FOR WATERING DURING THE FIRST 8 WEEKS FOLLOWING SEEDING OR PLANTING OF DISTURBED AREAS WHENEVER MORE THAN 7 CONSECUTIVE DAYS OF DRY WEATHER OCCUR.
18. INSTALL AND MAINTAIN A CONCRETE WASHOUT BASIN PER EPA 833-F-11-006. REQUIRE USE BY ALL CONCRETE CONTRACTORS. LIQUID MAY BE REUSED IN CONCRETE MIXING, EVAPORATED, OR DISPOSED OF AS WASTEWATER.
19. ROCK TRACKING PADS SHALL BE INSTALLED AT CONSTRUCTION EXITS TO PREVENT SEDIMENT TRACKING ONTO THE ROADWAYS.

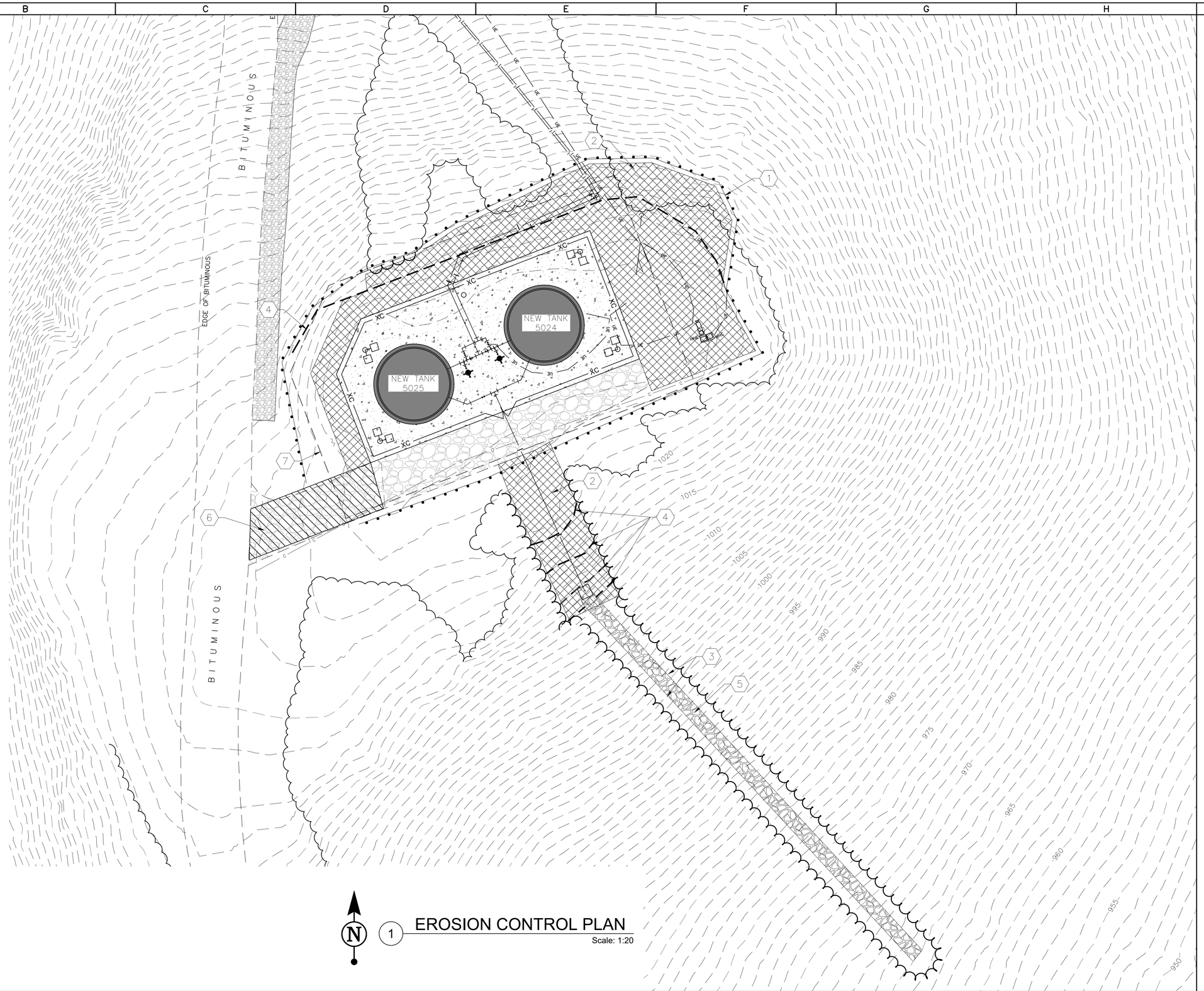

N

1 EROSION CONTROL PLAN
Scale: 1:20

DPW
FORT MCCOY, WI

MARK	MOD REQUEST # - DESCRIPTION	DATE	MOD #

SEH
SEH – TEPA ES JV, LLC
PHONE: 920.380.2830
329 JAY ST, SUITE 301
LA CROSSE, WI 54601

FORT McCOY
REPAIR SOUTH POST
RESERVOIRS
FORT McCOY, WISCONSIN

FORT McCOY
DIRECTORATE OF PUBLIC WORKS
2171 SOUTH 8TH AVE.
FORT MC COY, WI 54656

EROSION CONTROL PLAN

Designed by: SFA
Dwn by: SFA
Ckd by: EDH
Reviewed by: DMC
Submitted by: DPW
Date: 3/5/2026
Rev.
Work Order No 1612
Project Number 1503

SHEET NUMBER:
C1.2
SHEET 4 of 46

Plot date: 04/03/2026

KEYNOTES:

1. REMOVE FENCE AND GATES UPON INSTALLATION OF TEMPORARY CONSTRUCTION FENCING
2. TEMPORARY CONSTRUCTION FENCE
3. CLEAR AND GRUB AREA AS NECESSARY FOR PROPOSED IMPROVEMENTS
4. 20' CLEAR ZONE FROM PROPOSED FENCE
5. REMOVE ELECTRIC FIXTURE (SEE ELECTRICAL PLANS)

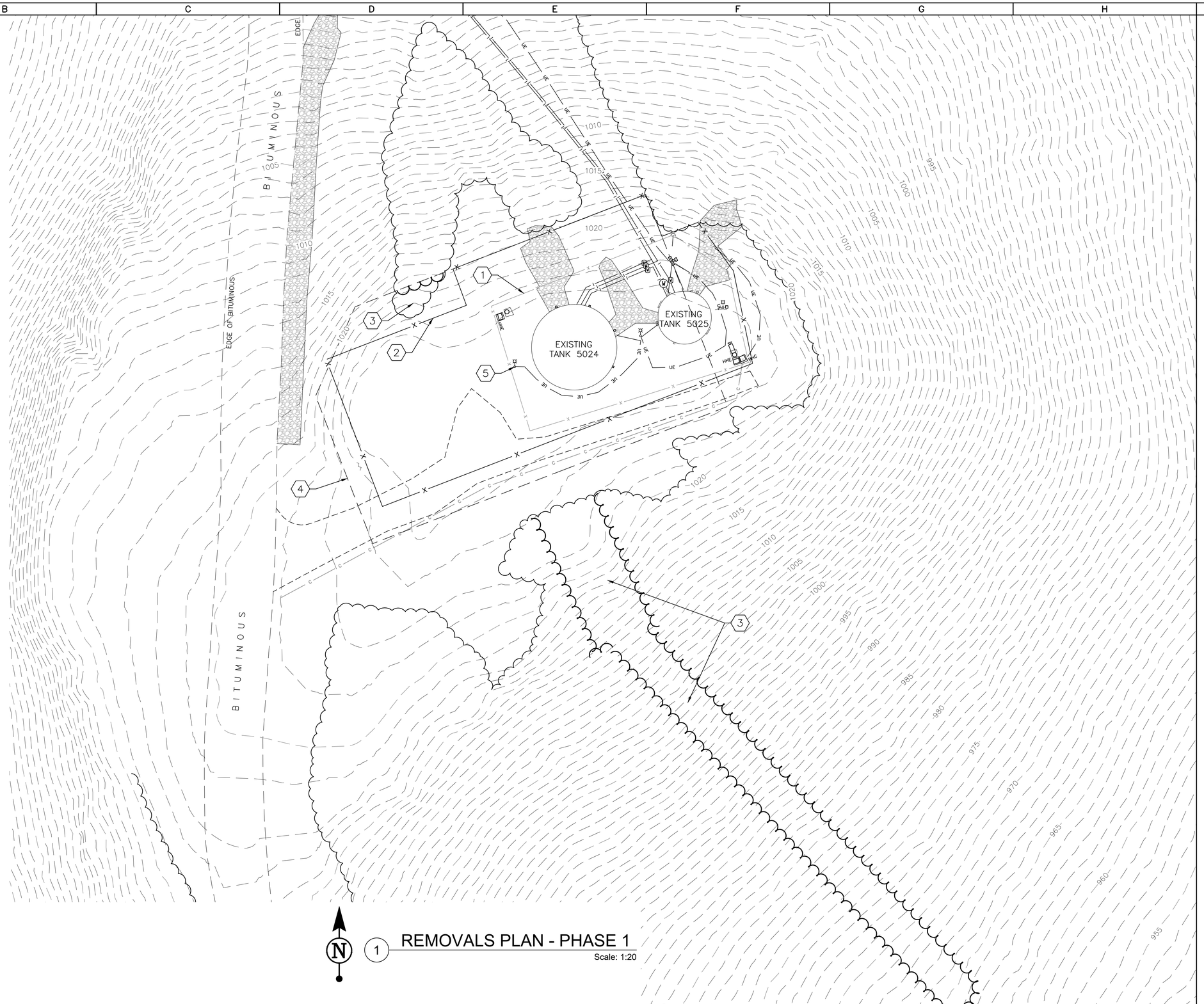

N

1 REMOVALS PLAN - PHASE 1

Scale: 1:20

DPW
FORT MCCOY, WI

MARK	MOD REQUEST # – DESCRIPTION	DATE	MOD #

SEH
SEH – TEPA ES JV, LLC
PHONE: 920.380.2830
329 JAY ST, SUITE 301
LA CROSSE, WI 54601

FORT McCOY
REPAIR SOUTH POST
RESERVOIRS
FORT McCOY, WISCONSIN

FORT McCOY
DIRECTORATE OF PUBLIC WORKS
2171 SOUTH 8TH AVE.
FORT MC COY, WI 54636

REMOVALS PLAN
PHASE 1

Designed by: SFA	Date: 3/5/2026
Dwn by: SFA	Ckd by: EDH
Rev.	
Reviewed by: DMC	Work Order No 1612
Submitted by: DPW	Project Number 1503

SHEET NUMBER:
C1.3
SHEET 5 of 46

Plot date: 04/03/2026

KEYNOTES:

1. 8-INCH INLET/OUTLET
2. 4-INCH RECIRCULATION INLET
3. 4-INCH RECIRCULATION LINE BETWEEN EXISTING TANKS (EXACT LOCATION UNKNOWN)
4. CONSTRUCT NEW 100,000 GALLON RESERVOIR
5. INSTALL CAPS AND MARK LOCATION WITH BLUE T-POST.
6. COORDINATE WITH OWNER TO CLOSE VALVES WHEN NEW TANK 5025 IS PLACED ONLINE
7. 8-INCH PVC C900
8. 6-INCH PVC C900
9. 4-INCH PVC C900
10. 8-INCH GATE VALVE
11. 6-INCH GATE VALVE
12. 4-INCH GATE VALVE
13. HYDRANT AND 6-INCH VALVE PROTECTED WITH BOLLARD
14. CONTRACTOR TO VERIFY EXISTING MATERIAL TYPE PRIOR TO CONNECTION
    - 14.1. 8-INCH CONNECTION VIA WET TAP
    - 14.2. 4-INCH CONNECTION VIA CUT-IN
15. 4-INCH PIPE TO CROSS OVER 8-INCH PIPE WITH INSULATION
16. TANK DRAIN STRUCTURE (C5.4/1)
17. INSULATION
18. 20' CLEAR ZONE FROM PROPOSED FENCE
19. TEMPORARY CONSTRUCTION FENCE
20. PROPOSED LIGHT/UTILITY POLE (SEE ELECTRICAL PLANS)

GENERAL NOTES:

1. PROVIDE A MINIMUM OF 7' OF COVER OVER WATER LINES OR PROVIDE INSULATION.

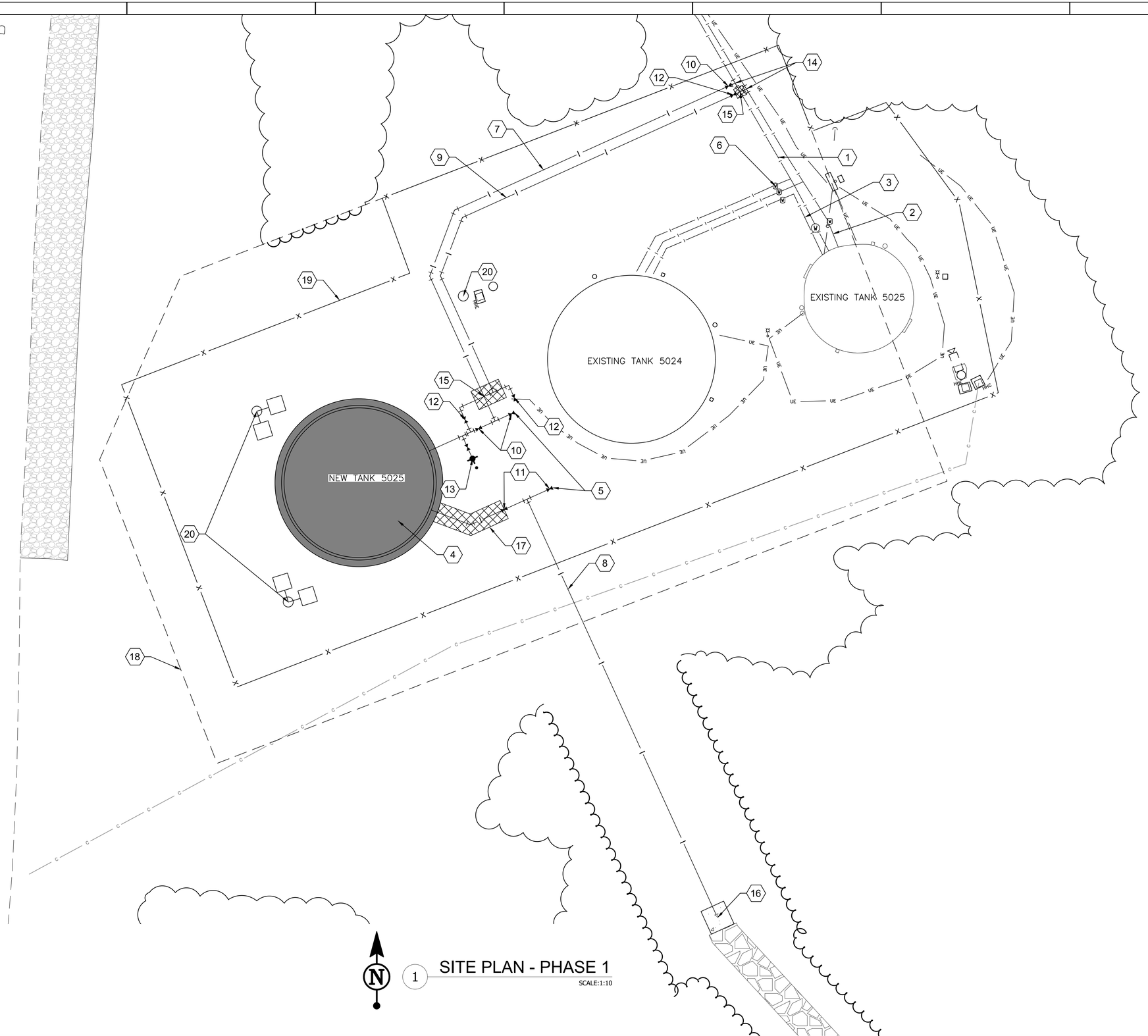

1 SITE PLAN - PHASE 1
SCALE:1:10

DPW
FORT MCCOY, WI

MARK	MOD REQUEST # - DESCRIPTION	DATE	MOD #

SEH – TEPA ES JV, LLC
PHONE: 920.380.2830
329 JAY ST, SUITE 301
LA CROSSE, WI 54601

FORT McCOY
REPAIR SOUTH POST
RESERVOIRS
FORT McCOY, WISCONSIN

FORT McCOY
DIRECTORATE OF PUBLIC WORKS
2171 SOUTH 8TH AVE.
FORT MC COY, WI 54656

SITE PLAN
PHASE 1

Designed by: SFA	Date: 3/5/2026
Dwn by: SFA	Ckd by: EDH
Reviewed by: DMC	Rev.
Submitted by: DPW	Work Order No 1612
	Project Number

SHEET NUMBER:
C1.4

SHEET 6 of 46

Save: 3/2/2026 2:21 PM ssarthun Plot: 3/4/2026 9:19 AM X:\UZ\U\USAMC\1810865-final-dsgn\51-drawings\95-AutoCAD Base Files\sheets\C1.4 SITE PLAN.dwg

Plot date: 04/03/2026 File path: X:\UZ\U\USAMC\181086\5-FINAL-DSGN\51-DRAWINGS\95-AUTOCAD BASE FILES\SHEETS\C1.4 SITE PLAN.DWG

KEYNOTES:

1. GRADE AREA AROUND NEW TANK 5025 TO DRAIN AWAY FROM STRUCTURE
2. GRADING LIMITS

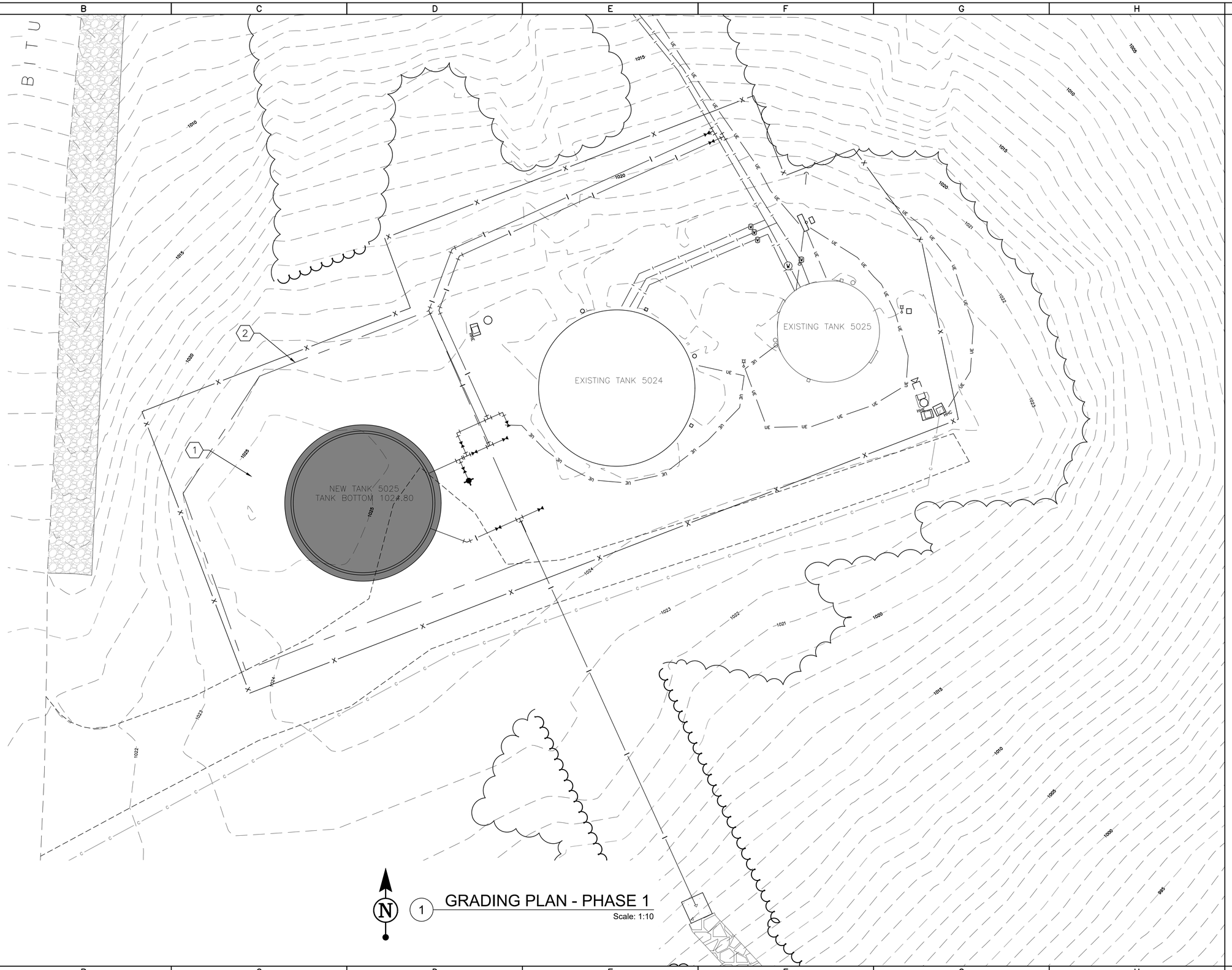

1 GRADING PLAN - PHASE 1

Scale: 1:10

DPW
FORT MCCOY, WI

MARK	MOD REQUEST # – DESCRIPTION	DATE	MOD #

SEH – TEPA ES JV, LLC
PHONE: 920.380.2830
329 JAY ST, SUITE 301
LA CROSSE, WI 54601

FORT McCOY
REPAIR SOUTH POST
RESERVOIRS
FORT McCOY, WISCONSIN

FORT McCOY
DIRECTORATE OF PUBLIC WORKS
2171 SOUTH 8TH AVE.
FORT MC COY, WI 54656

GRADING PLAN
PHASE 1

Designed by: SFA	Date: 3/5/2026
Dwn by: SFA	Ckd by: EDH
Reviewed by: DMC	Rev.
Submitted by: DPW	Work Order No 1612
	Project Number 1503

SHEET NUMBER:

C1.5

SHEET 7 of 46

Plot date: 04/03/2026

KEYNOTES:

1. REMOVE ELECTRIC FIXTURE (SEE ELECTRICAL PLANS)
2. REMOVE EXISTING TANK 5024 ONCE NEW TANK 5025 IS ONLINE
3. REMOVE WATER MAIN TO VALVES AND CAP UPON REMOVAL OF EXISTING TANK 5024
4. 20' CLEAR ZONE FROM PROPOSED FENCE

1 REMOVALS PLAN - PHASE 2A

Scale: 1:10

DPW
FORT MCCOY, WI

MARK	MOD REQUEST # – DESCRIPTION	DATE	MOD #

SEH – TEPA ES JV, LLC
PHONE: 920.380.2830
329 JAY ST, SUITE 301
LA CROSSE, WI 54601

FORT McCOY
REPAIR SOUTH POST
RESERVOIRS
FORT McCOY, WISCONSIN

FORT McCOY
DIRECTORATE OF PUBLIC WORKS
2171 SOUTH 8TH AVE.
FORT MC COY, WI 54656

REMOVALS PLAN
PHASE 2A

Designed by: SFA	Date: 3/5/2026
Dwn by: SFA	Ckd by: EDH
Reviewed by: DMC	Rev.
Submitted by: DPW	Work Order No 1612
	Project Number 1503

SHEET NUMBER:

C1.6

SHEET 8 of 46

Plot date: 04/03/2026

KEYNOTES:

1. COORDINATE WITH COR TO CLOSE VALVES AND REMOVE TO NEW TEES WHEN TANK 5025 IS PLACED ONLINE
2. 8-INCH PVC C900
3. 6-INCH PVC C900
4. 4-INCH PVC C900
5. HYDRANT AND 6" GATE VALVE PROTECTED WITH BOLLARD
6. GRAVEL ACCESS DRIVE (C5.2/8)
7. 20' CLEAR ZONE FROM PROPOSED FENCE
8. PROPOSED LIGHT/UTILITY POLE (SEE ELECTRICAL PLANS)
9. INSULATION

GENERAL NOTES:

1. PROVIDE A MINIMUM OF 7' OF COVER OVER WATER LINES OR PROVIDE INSULATION.

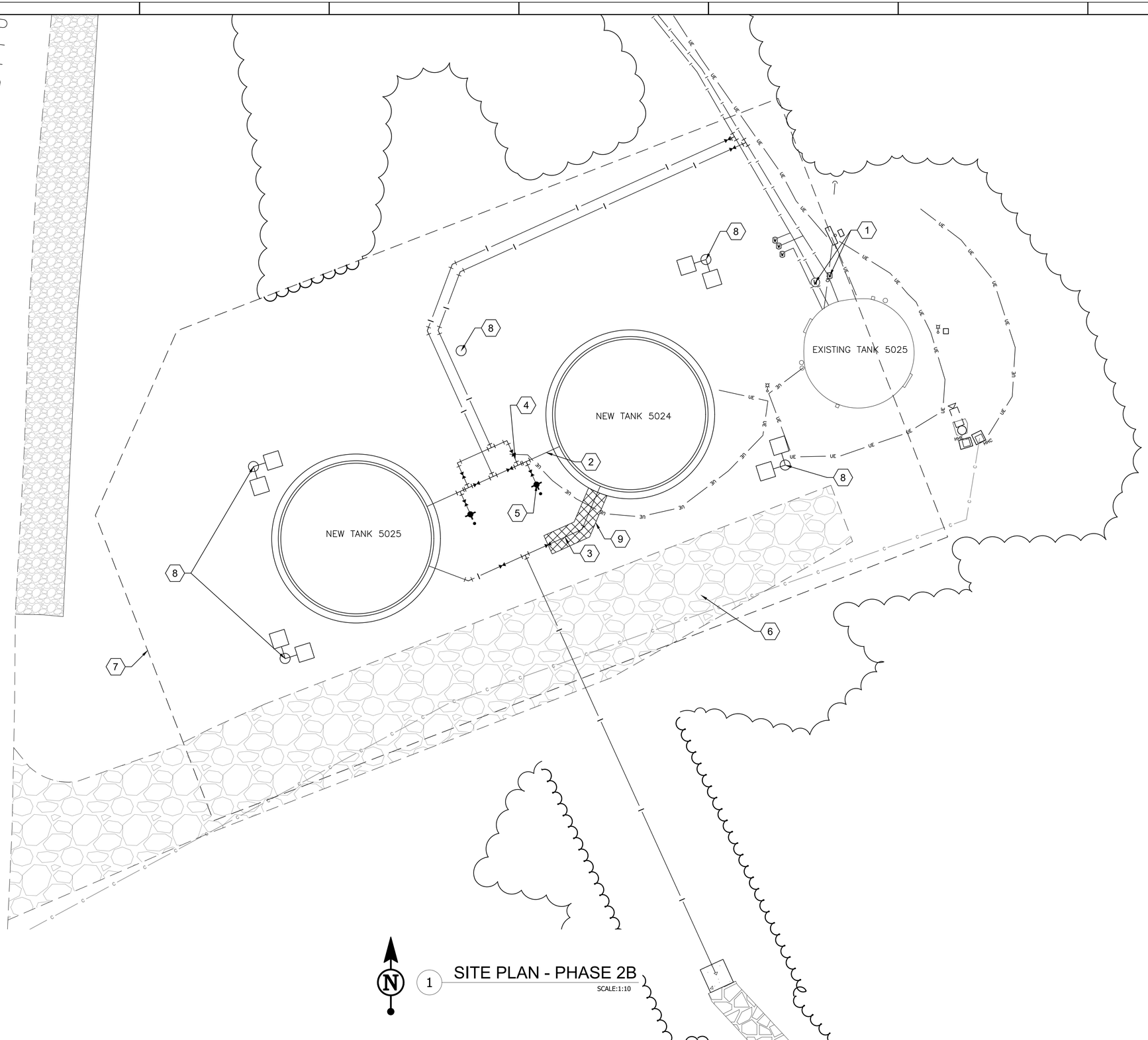

1 SITE PLAN - PHASE 2B

SCALE:1:10

DPW
FORT MCCOY, WI

MARK	MOD REQUEST # - DESCRIPTION	DATE	MOD #

SEH
SEH – TEPA ES JV, LLC
PHONE: 920.380.2830
329 JAY ST, SUITE 301
LA CROSSE, WI 54601

FORT McCOY
REPAIR SOUTH POST
RESERVOIRS
FORT McCOY, WISCONSIN

FORT McCOY
DIRECTORATE OF PUBLIC WORKS
2171 SOUTH 8TH AVE.
FORT MC COY, WI 54656

SITE PLAN
PHASE 2B

Designed by: SFA	Date: 3/5/2026
Dwn by: SFA	Ckd by: EDH
Reviewed by: DMC	Rev.
Submitted by: DPW	Work Order No 1612
	Project Number

SHEET NUMBER:
C1.7
SHEET 9 of 46

Save: 3/2/2026 2:21 PM saarthun Plot: 3/4/2026 9:20 AM X:\UZ\U\USAMC\181086\5-final-dsgn\51-drawings\95-AutoCAD Base Files\sheets\C1.4 SITE PLAN.dwg

Plot date: 04/03/2026 File path: X:\UZ\U\USAMC\181086\5-FINAL-DSGN\51-DRAWINGS\95-AUTOCAD BASE FILES\SHEETS\C1.4 SITE PLAN.DWG

KEYNOTES:

1. REMOVE ELECTRIC FIXTURE (SEE ELECTRICAL PLANS)
2. REMOVE EXISTING TANK 5025 ONCE NEW TANK 5024 AND NEW TANK 5025 ARE ONLINE
3. REMOVE AND SALVAGE RIPRAP TO BE USED AT THE TANK DRAIN STRUCTURE DISCHARGE AND BACKFILL TO MATCH SURROUNDING GRADE
4. REMOVE WATER MAIN, VALVES, AND MANHOLE TO NEW TEE AND CAP ONCE NEW TANKS ARE BOTH ONLINE. COMPLETELY REMOVE RECIRCULATION MAIN AND VALVE BETWEEN EXISTING TANKS.
5. 20' CLEAR ZONE FROM PROPOSED FENCE

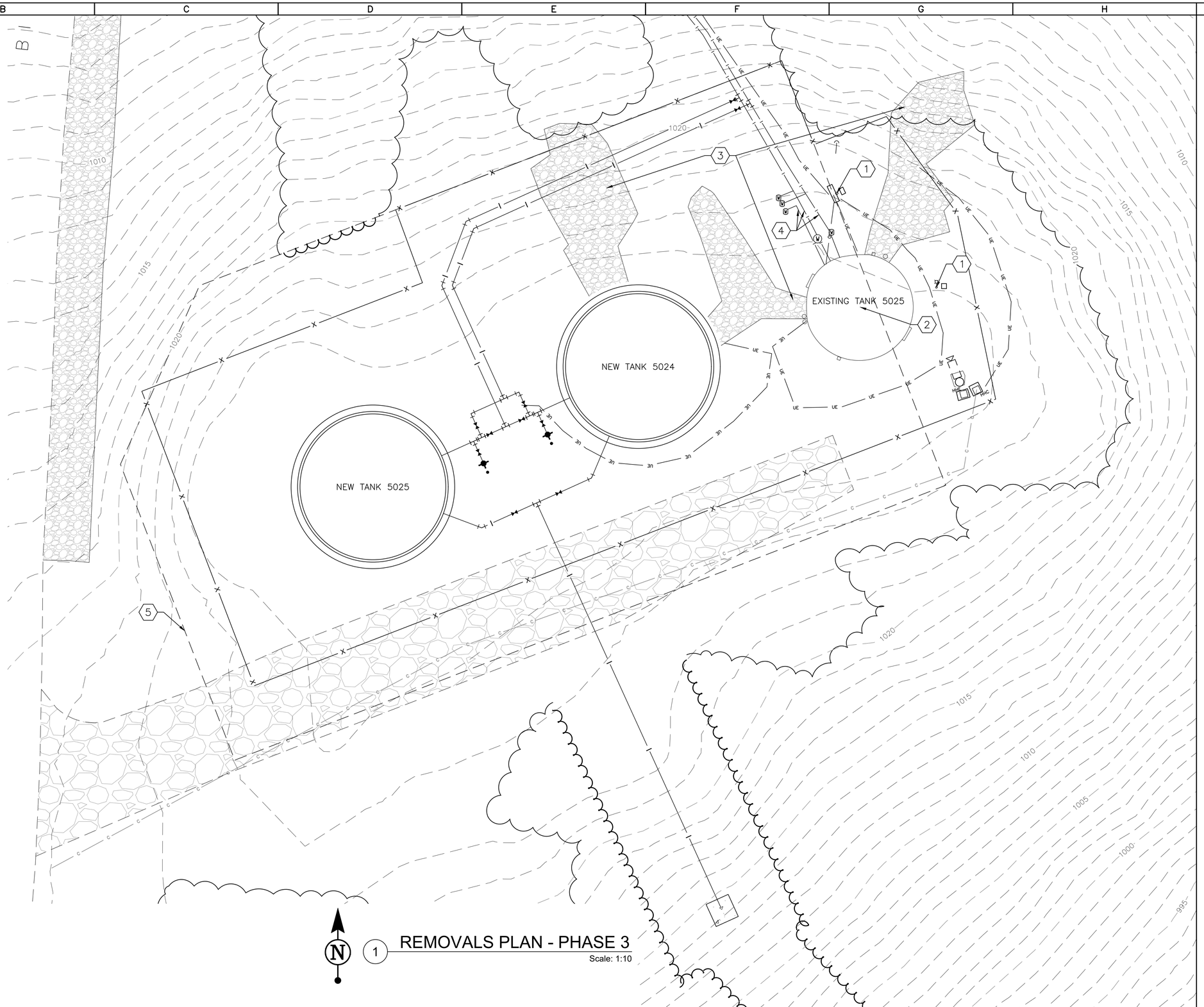

1 REMOVALS PLAN - PHASE 3

Scale: 1:10

DPW
FORT MCCOY, WI

MARK	MOD REQUEST # – DESCRIPTION	DATE	MOD #

SEH
SEH – TEPA ES JV, LLC
PHONE: 920.380.2830
329 JAY ST, SUITE 301
LA CROSSE, WI 54601

FORT McCOY
REPAIR SOUTH POST
RESERVOIRS
FORT McCOY, WISCONSIN

FORT McCOY
DIRECTORATE OF PUBLIC WORKS
2171 SOUTH 8TH AVE.
FORT MC COY, WI 54656

REMOVALS PLAN
PHASE 3

Designed by: SFA	Ckd by: EDH	Date: 3/5/2026
Dwn by: SFA		Rev.
Reviewed by: DMC		Work Order No 1612
Submitted by: DPW		Project Number 1503

SHEET NUMBER:
C1.8
SHEET 10 of 46

Plot date: 04/03/2026

KEYNOTES:

1. 20' CLEAR ZONE FROM PROPOSED FENCE
2. FENCE AND GATE (C5.2/5-6 AND C5.3/1-3)
3. 6-INCH CONCRETE SLAB (C5.2/7)
4. EXPANSION JOINT
5. CONTROL JOINT

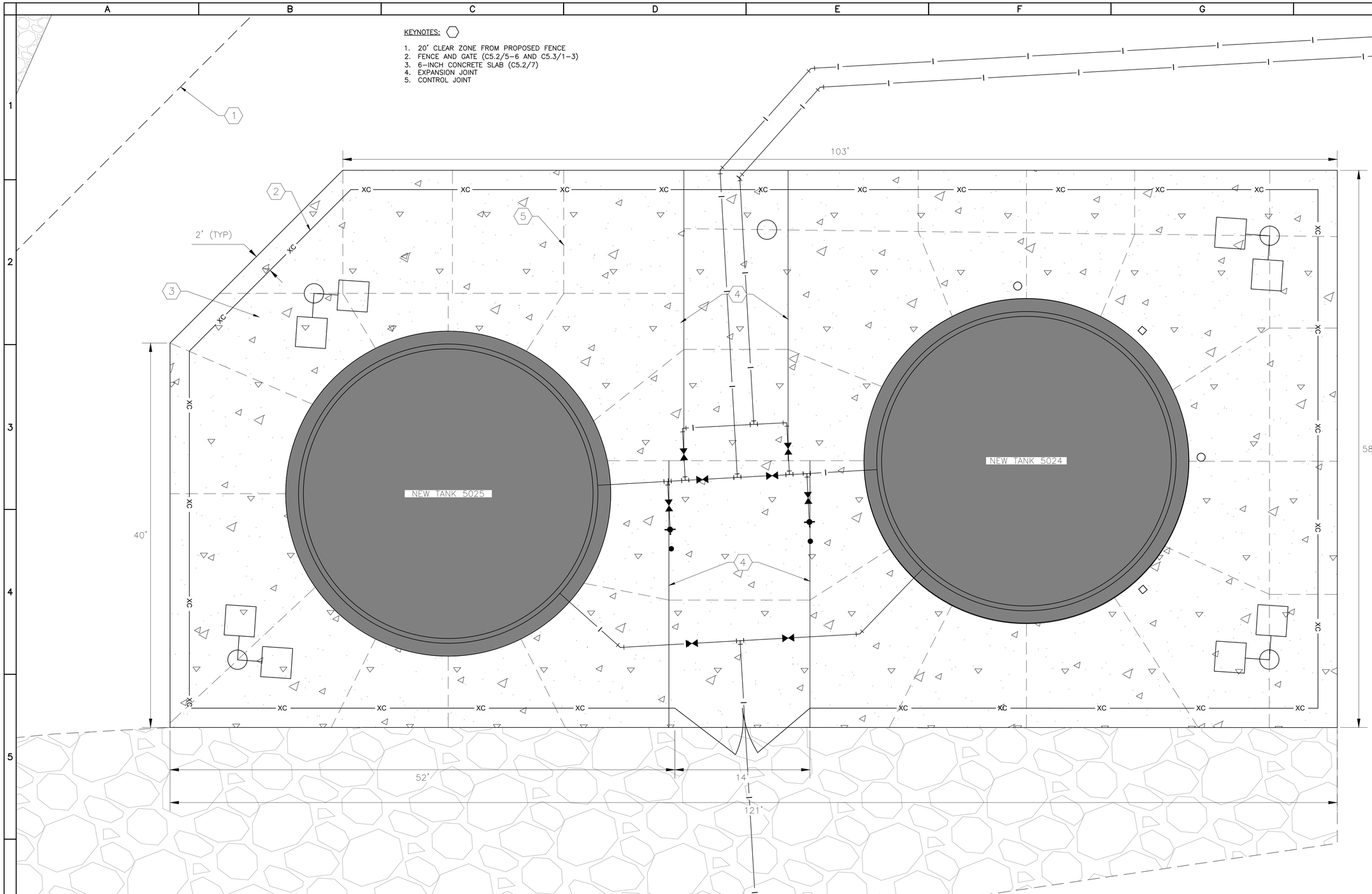

GENERAL NOTES:

1. CONCRETE JOINTING PLAN IS APPROXIMATE. CONTRACTOR TO SUBMIT A JOINT LAYOUT DESIGN TO THE COR AT LEAST 7 CALENDAR DAYS BEFORE CONCRETE INSTALLATION. CONTRACTOR TO PLAN AND LOCATE JOINTS AS NECESSARY TO PREVENT UNCONTROLLED CRACKING.
2. MARK THE LOCATION OF CONCRETE JOINTS IN THE FIELD. DO NOT LAY OUT JOINTS UNTIL THE COR HAS REVIEWED THE JOINT LAYOUT DESIGN.
3. FOLLOW THE CONCRETE PAVEMENT JOINTING PLAN DETAILS MARKING ADJUSTMENTS AS REQUIRED TO FIT FIELD CONDITIONS.

1 SITE PLAN AND JOINTING PLAN - PHASE 3

Scale: 1:5

DPW
FORT MCCOY, WI

MARK	MOD REQUEST # - DESCRIPTION	DATE	MOD #

SEH – TEPA ES JV, LLC
PHONE: 920.380.2830
329 JAY ST, SUITE 301
LA CROSSE, WI 54601

FORT McCOY
REPAIR SOUTH POST
RESERVOIRS
FORT McCOY, WISCONSIN

FORT McCOY
DIRECTORATE OF PUBLIC WORKS
2171 SOUTH 8TH AVE.
FORT MC COY, WI 54636

SITE PLAN AND
JOINTING PLAN
PHASE 3

Designed by: SFA	Date: 3/5/2026
Dwn by: SFA	Ckd by: EDH
Reviewed by: ###	Rev.
Submitted by: DPW	Work Order No 1612
	Project Number 15013

SHEET NUMBER:

C1.9

SHEET 11 of 46

Plot date: 04/03/2026

KEYNOTES:

1. 20' CLEAR ZONE FROM PROPOSED FENCE

1 GRADING PLAN - PHASE 2B

Scale: 1:10

DPW
FORT MCCOY, WI

MARK	MOD REQUEST # – DESCRIPTION	DATE	MOD #

SEH – TEPA ES JV, LLC
PHONE: 920.380.2830
329 JAY ST, SUITE 301
LA CROSSE, WI 54601

FORT McCOY
REPAIR SOUTH POST
RESERVOIRS
FORT McCOY, WISCONSIN

FORT McCOY
DIRECTORATE OF PUBLIC WORKS
2171 SOUTH 8TH AVE.
FORT MC COY, WI 54636

GRADING PLAN
PHASE 3

Designed by: SFA	Date: 3/5/2026
Dwn by: SFA	Ckd by: EDH
Rev.	
Reviewed by: DMC	Work Order No 1612
Submitted by: DPW	Project Number 15O3

SHEET NUMBER:

C1.10

SHEET 12 of 46

Plot date: 04/03/2026

KEYNOTES:

1. 20' CLEAR ZONE FROM PROPOSED FENCE

LOCATION TABLE			
POINT	NORTHING	EASTING	DESCRIPTION
100	389553.3988	649276.6030	TANK CENTER
101	389578.1417	649331.2636	TANK CENTER
200	389580.7195	649254.3300	CONCRETE SLAB
201	389617.8642	649350.4295	CONCRETE SLAB
202	389564.0079	649371.2462	CONCRETE SLAB
203	389520.4105	649258.4525	CONCRETE SLAB
204	389557.5726	649244.0885	CONCRETE SLAB
300	389632.3466	649354.2948	WATER FITTING
301	389633.5256	649352.0254	WATER FITTING
302	389631.1633	649351.6688	WATER FITTING
303	389632.9027	649350.6614	WATER FITTING
304	389608.0551	649295.7693	WATER FITTING
305	389606.5747	649297.3488	WATER FITTING
306	389594.8212	649290.7830	WATER FITTING
307	389594.8912	649292.9467	WATER FITTING
308	389568.4740	649296.7875	WATER FITTING
309	389571.5115	649303.5456	WATER FITTING
310	389572.9097	649306.6566	WATER FITTING
311	389566.0068	649297.8964	WATER FITTING
312	389570.4556	649307.7595	WATER FITTING
313	389562.7805	649297.3285	WATER FITTING
314	389563.5375	649299.0008	WATER FITTING
315	389564.2707	649300.6206	WATER FITTING
316	389565.7702	649303.9333	WATER FITTING
317	389567.2467	649307.1950	WATER FITTING
318	389568.0015	649308.8625	WATER FITTING
319	389568.7342	649310.5085	WATER FITTING
320	389560.5060	649298.3663	WATER FITTING
321	389566.4468	649311.5312	WATER FITTING
322	389558.2285	649299.3972	WATER FITTING
323	389564.1553	649312.5721	WATER FITTING
324	389544.9676	649298.9798	WATER FITTING
325	389548.0269	649305.7383	WATER FITTING
326	389550.0907	649310.2925	WATER FITTING
327	389552.1507	649314.8484	WATER FITTING
328	389555.2100	649321.6068	WATER FITTING
329	389466.8790	649348.1922	WATER FITTING
400	389567.7469	649256.1452	LIGHT POLE
401	389590.8250	649297.5446	LIGHT POLE
402	389609.0115	649346.3521	LIGHT POLE
403	389568.0385	649362.1492	LIGHT POLE
404	389529.4607	649262.4509	LIGHT POLE

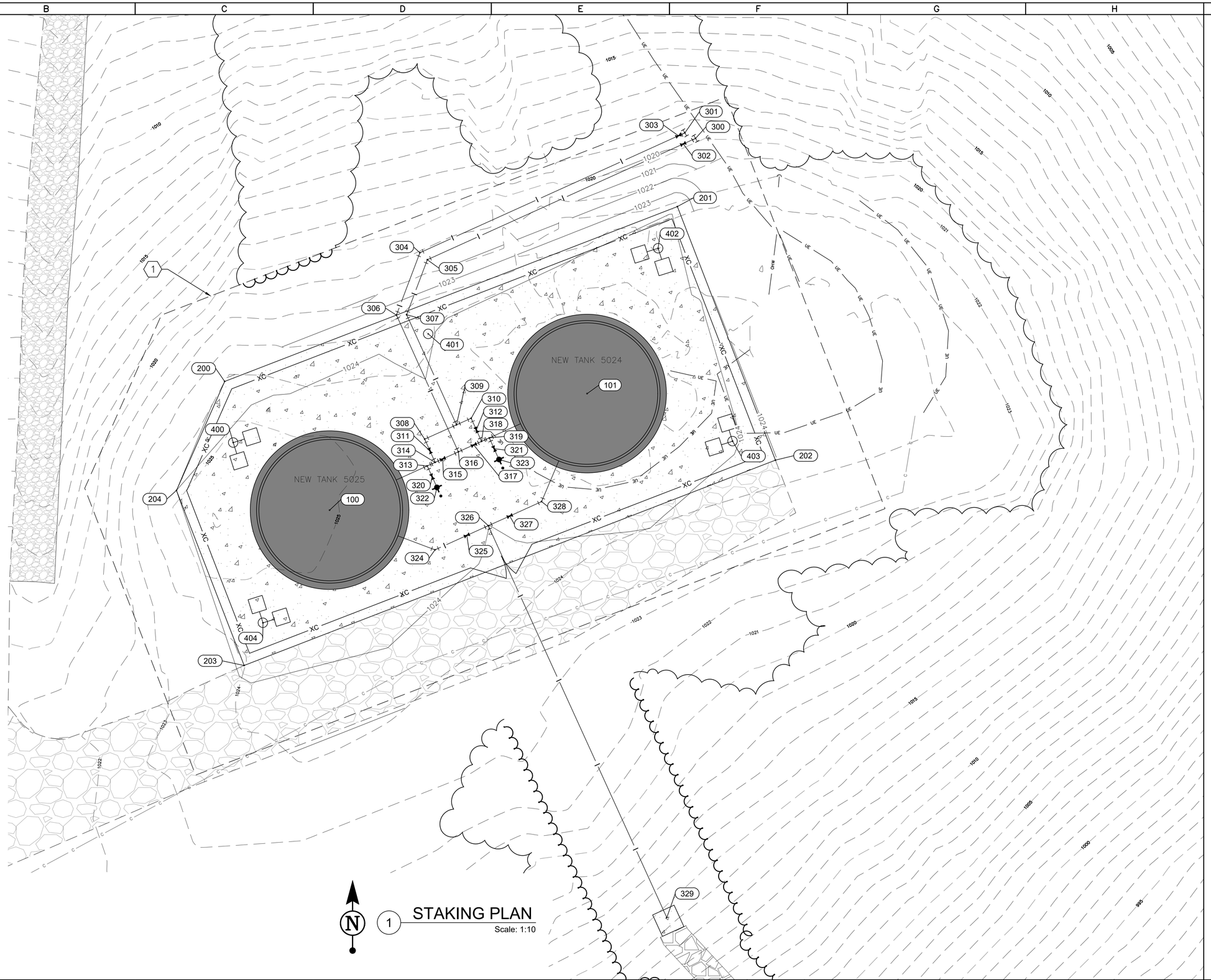

N

1 STAKING PLAN
Scale: 1:10

DPW
FORT MCCOY, WI

MARK	MOD REQUEST # – DESCRIPTION	DATE	MOD #

SEH – TEPA ES JV, LLC
PHONE: 920.380.2830
329 JAY ST, SUITE 301
LA CROSSE, WI 54601

FORT McCOY
REPAIR SOUTH POST
RESERVOIRS
FORT McCOY, WISCONSIN

FORT McCOY
DIRECTORATE OF PUBLIC WORKS
2171 SOUTH 8TH AVE.
FORT MC COY, WI 54636

STAKING PLAN

Designed by: SFA	Ckd by: EDH	Date: 3/5/2026
Dwn by: SFA		Rev.
Reviewed by: DMC		Work Order No 1612
Submitted by: DPW		Project Number 15O3

SHEET NUMBER:
C1.11
SHEET 13 of 46

Plot date: 04/03/2026

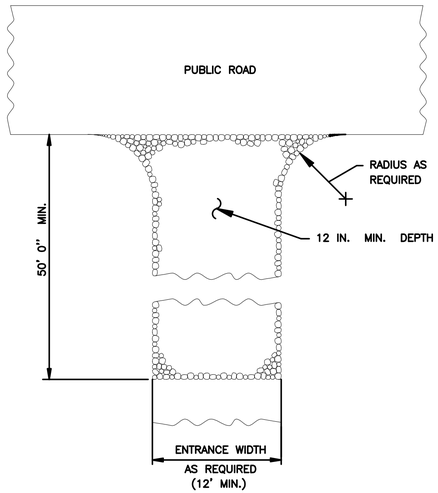

NOTES:

(2) ROCKS AT ENTRANCE CLEAN WORKSITE MUD OFF OF TRUCKS TIRES BEFORE DRIVING ON MAIN ROAD. THIS WILL PREVENT AUTO DAMAGE. KEEP CONSTRUCTION SEDIMENT OUT OF DRAINAGE SYSTEMS AND WETLANDS.

GRADATION FOR STONE TRACKING PAD

SIEVE SIZE	PERCENT PASSING BY WEIGHT
3"	100
2-1/2"	90-100
1-1/2"	25-60
3/4"	0-20
3/8"	0-5

1 C5.1 ROCK TRACKING PAD

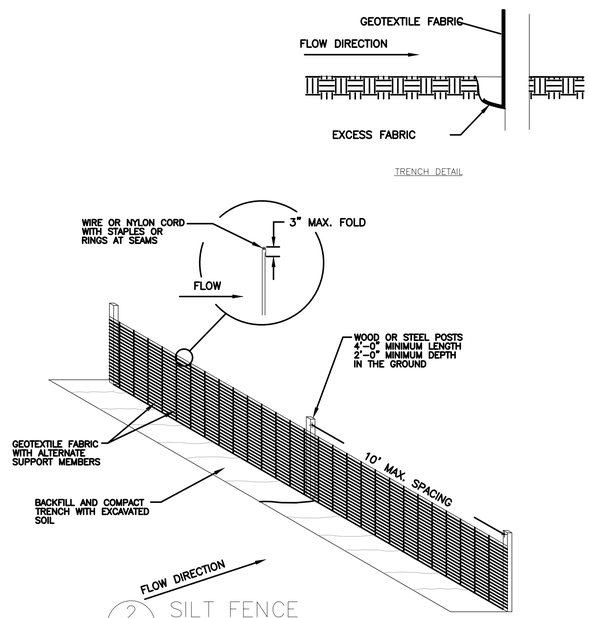

2 C5.1 SILT FENCE

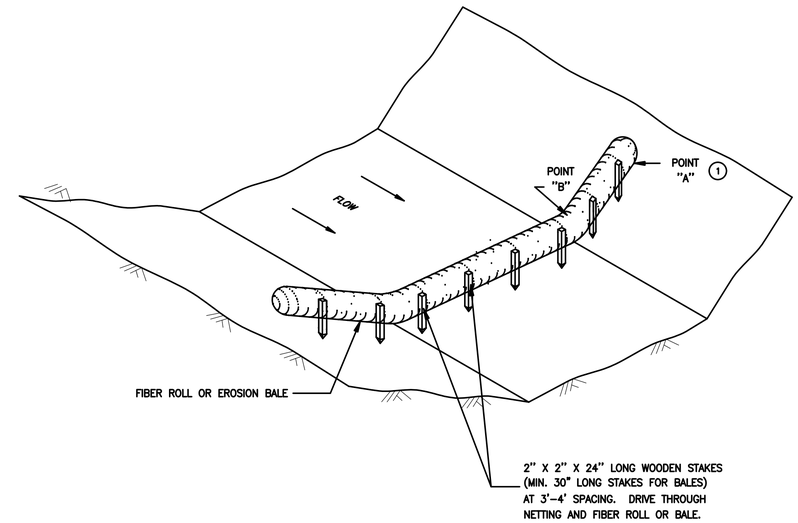

(1) POINT "A" MUST BE 1' HIGHER (MIN) THAN POINT "B" TO ENSURE THAT WATER FLOWS OVER THE DIKE AND NOT AROUND THE ENDS.

3 C5.1 TEMPORARY DITCH CHECK (BIO ROLL)

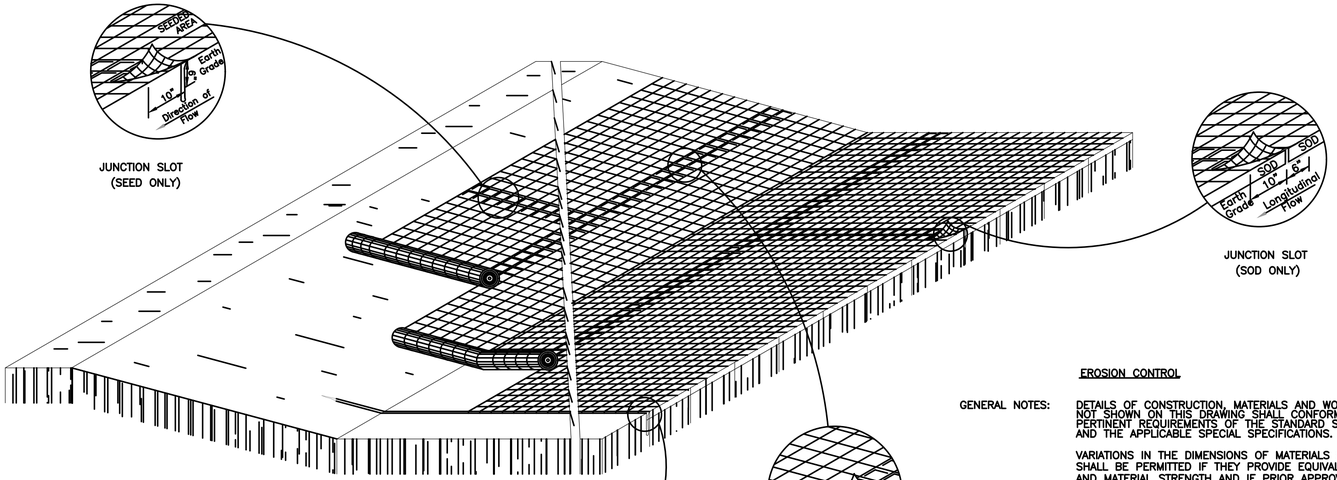

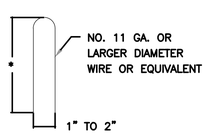

DETAIL OF TYPICAL STAPLE

* 6" MIN. FOR FIRM SOILS
* 12" MIN FOR LOOSE SOILS
* 8" MIN. WHERE BOTH SOD AND MATS ARE BEING USED

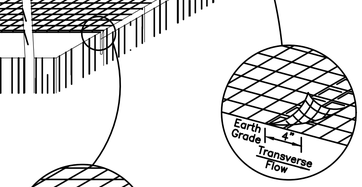

LAP JOINT (SEED & SOD)

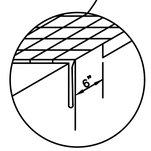

ANCHOR SLOT AT BEGINNING AND END OF EROSION MAT (SEED AND SOD)

EROSION CONTROL

GENERAL NOTES: DETAILS OF CONSTRUCTION, MATERIALS AND WORKMANSHIP NOT SHOWN ON THIS DRAWING SHALL CONFORM TO THE PERTINENT REQUIREMENTS OF THE STANDARD SPECIFICATIONS AND THE APPLICABLE SPECIAL SPECIFICATIONS.

VARIATIONS IN THE DIMENSIONS OF MATERIALS SHOWN HEREON SHALL BE PERMITTED IF THEY PROVIDE EQUIVALENT PROTECTION AND MATERIAL STRENGTH AND IF PRIOR APPROVAL OF THE ENGINEER IS OBTAINED.

LAP JOINTS SHALL NOT BE PLACED IN THE BOTTOM OF V-SHAPED DITCHED.

JUNCTION SLOTS ON ADJACENT STRIPS OF MATTING SHALL BE STAGGERED A MINIMUM OF 4 FEET APART.

EDGES OF THE EROSION MAT SHALL BE IMPRESSED IN THE SOIL.

EROSION MAT OVER SOD:

A: ONLY JUTE FABRIC WILL BE PERMITTED OVER SOD.

B: ROAD STAKES FOR THE SOD MAY BE OMITTED BY THE ENGINEER IF THE EXISTING SLOPE AND SOIL CONDITIONS SO WARRANT.

C: THE WIDTH OF EROSION MAT SHALL ALWAYS EQUAL THE SOD WIDTH.

D: SOD STRIPS MAY BE PLACED EITHER LONGITUDINALLY OR TRANSVERSELY TO THE FLOW LINE OF THE DITCH.

EROSION MAT OVER SEEDING: JUNCTION OR ANCHOR SLOTS SHALL BE AT MINIMUM INTERVALS OF 100 FEET ON GRADES UP TO AND INCLUDING 3 PERCENT, AND 50 FEET ON GRADES EXCEEDING 3 PERCENT.

4 C5.1 EROSION MAT AND SOD

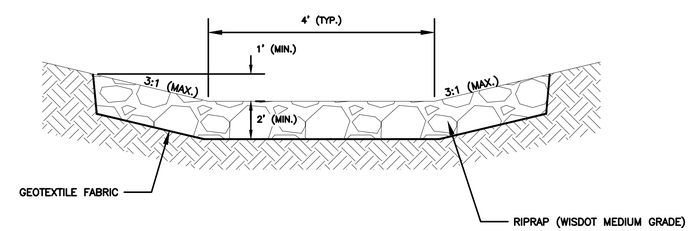

5 C5.1 RIPRAP CHANNEL

DPW
FORT MCCOY, WI

MARK	MOD REQUEST # - DESCRIPTION	DATE	MOD #

SEH — TEPA ES JV, LLC
PHONE: 920.380.2830
329 JAY ST, SUITE 301
LA CROSSE, WI 54601

FORT McCOY
REPAIR SOUTH POST RESERVOIRS
FORT McCOY, WISCONSIN

Designed by: SFA	Ckd by: EDH	Date: 3/5/2026
Dwn by: SFA		Rev.
Reviewed by: DMC		Work Order No 1612
Submitted by: DPW		Project Number 15O3

FORT McCOY
DIRECTORATE OF PUBLIC WORKS
2171 SOUTH 8TH AVE.
FORT MC COY, WI 54656

CONSTRUCTION DETAILS

SHEET NUMBER:
C5.1
SHEET 14 of 46

Plot date: 04/03/2026

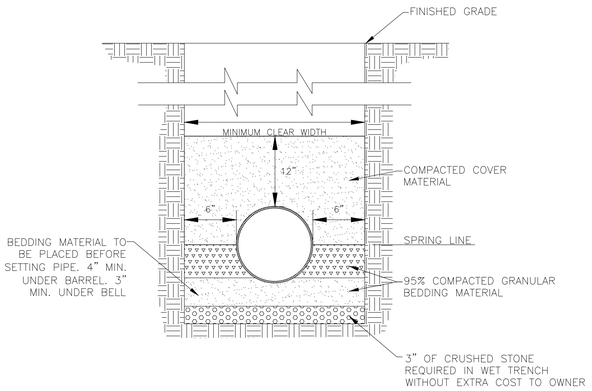

1 C5.2 CLASS "B" BEDDING

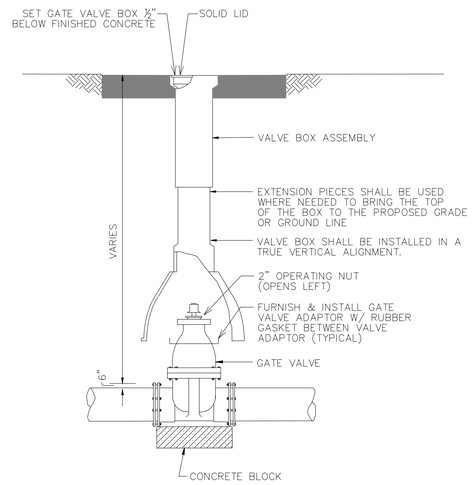

2 C5.2 GATE VALVE & BOX

NOTE: PROVIDE CATHODIC PROTECTION AND PETROLATUM WAX TAPE SYSTEM ON DUCTILE IRON VALVE, SEE EC SHEETS.

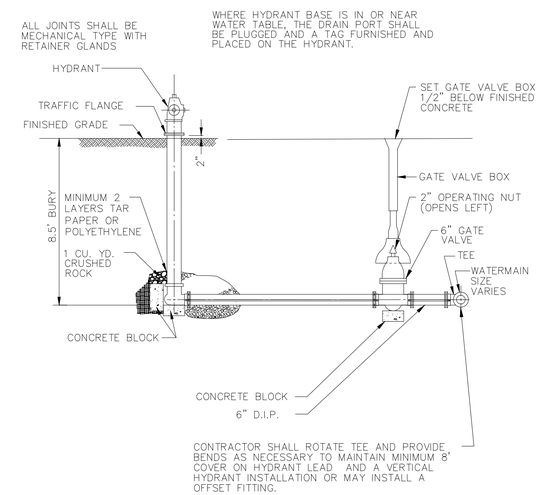

3 C5.2 FIRE HYDRANT

NOTE: PROVIDE CATHODIC PROTECTION AND PETROLATUM WAX TAPE SYSTEM ON DUCTILE IRON VALVE, SEE EC SHEETS.

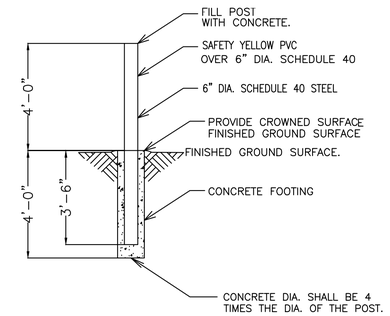

4 C5.2 EXTERIOR PIPE BOLLARD DETAIL

SINGLE OR DOUBLE SWING GATES			
NOM HEIGHT (B)	NOM HEIGHT (H)	UPRIGHT HT (U)	FRAME HT (F)
BAR LENGTH	NOM HT INCLUDING BARBED WIRE	ACTUAL DIM	ACTUAL DIM
10'-0"	7'-0"	6'-10"	5'-8 1/2"
11'-0"	8'-0"	7'-10"	6'-8 1/2"
12'-0"	9'-0"	8'-10"	7'-8 1/2"

DOUBLE SWING GATES		
OPENING	GATE POSTS	HINGE SPACE (S)
FACE TO FACE	SIZES	POST TO UPRIGHT
8'-0" THROUGH 12'-0"	2.875" OD	FOR GATE POSTS: 2 1/4"
14'-0" THROUGH 24'-0"	4" OD	FOR GATE POSTS: 2 1/4"
26'-0" THROUGH 30'-0"	6.625" OD	FOR GATE POSTS: 3 1/2"

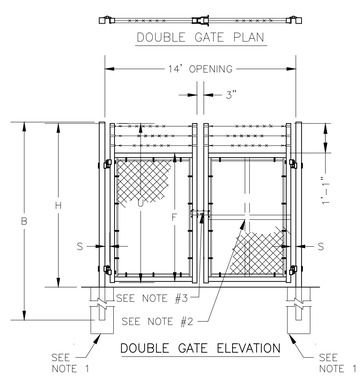

1. CONCRETE DIA. SHALL BE 4 TIMES THE DIA. OF THE POST. REINFORCEMENT ONLY REQUIRED AT CANTILEVER GATES UNDER THE ROLLERS.
2. CENTER UPRIGHT REQUIRED ON GATES 8'-0" & WIDER.
3. DOUBLE SWING GATES LATCHES SHALL CONSIST OF A COMMERCIAL GRADE DOUBLE GATE LATCH, BOLTED THROUGH VERTICAL MEMBER, IN ADDITION TO "U" BOLTS.
4. PROVIDE A MINIMUM 3' LENGTH OF GRADE 43, ¼ INCH TRADE SIZE CHAIN WITH 2 GRADE 43, ¼ INCH TRADE SIZE GRAB HOOKS WITH CLEVIS FOR EACH SWING GATE.

5 C5.2 DOUBLE SWING GATE

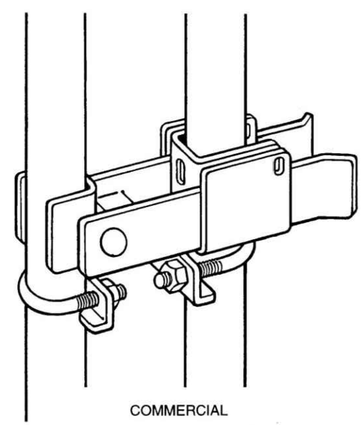

COMMERCIAL

DOUBLE GATE LATCH*

Fits 1⅝" or 2" frame
Adjusts for 2" – 6" gap.

No. 4000

STRONG ARM DOUBLE GATE TYPE GALVANIZED PRESSED STEEL COMMERCIAL GRADE LOCKING LATCH.

6 C5.2 GATE LATCH DETAIL

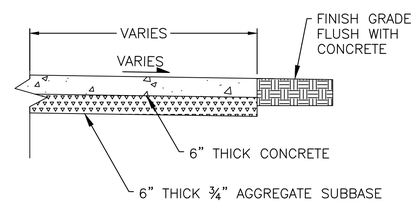

7 C5.2 CONCRETE FLATWORK

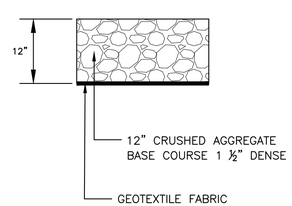

8 C5.2 GRAVEL SECTION

DPW
FORT MCCOY, WI

MARK	MOD REQUEST # – DESCRIPTION	DATE	MOD #

SEH – TEPA ES JV, LLC
PHONE: 920.380.2830
329 JAY ST, SUITE 301
LA CROSSE, WI 54601

FORT McCOY
REPAIR SOUTH POST RESERVOIRS
FORT McCOY, WISCONSIN

Designed by: SFA
Dwn by: SFA
Ckd by: EDH
Reviewed by: DMC
Submitted by: DPW
Date: 3/5/2026
Rev.
Work Order No 16612
Project Number 1503

FORT McCOY
DIRECTORATE OF PUBLIC WORKS
2171 SOUTH 8TH AVE.
FORT MC COY, WI 54656

CONSTRUCTION DETAILS

SHEET NUMBER:
C5.2
SHEET 15 of 46

Plot date: 04/03/2026

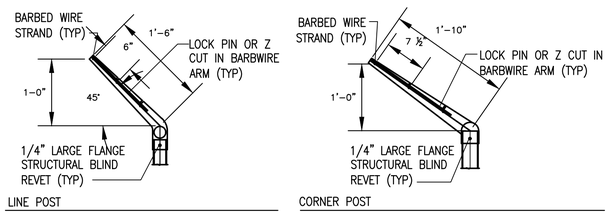

SINGLE EXTENSION ARM DETAILS

NOTE: ARM TO EXTEND OUTWARD TO INSECURE SIDE OF INSTALLATION.

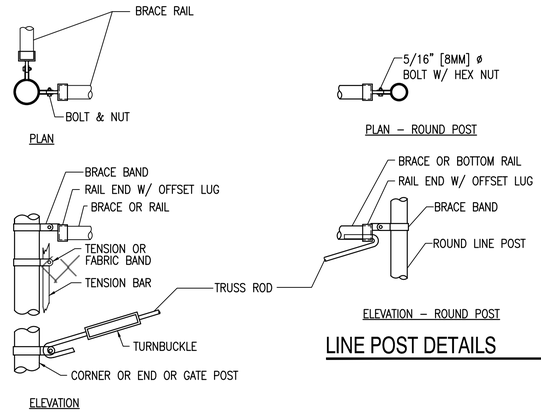

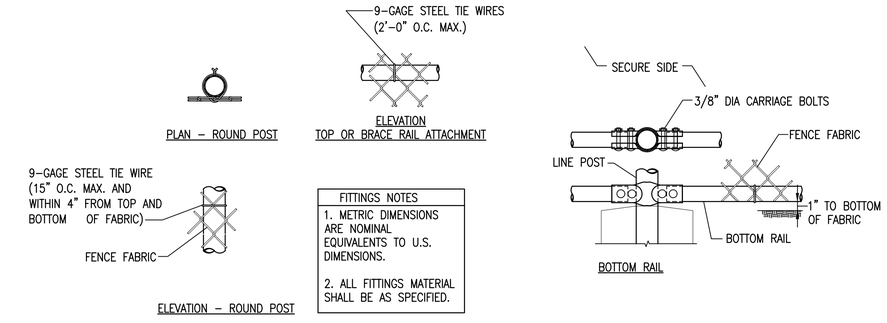

FITTINGS NOTES
1. METRIC DIMENSIONS ARE NOMINAL EQUIVALENTS TO U.S. DIMENSIONS.
2. ALL FITTINGS MATERIAL SHALL BE AS SPECIFIED.

LINE POST DETAILS

1 / C5.3 CORNER OR END POSTS

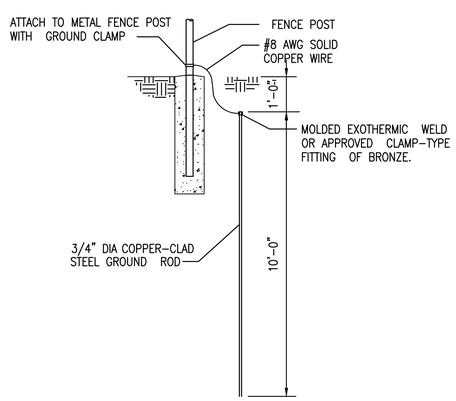

2 / C5.3 GROUNDING DETAIL

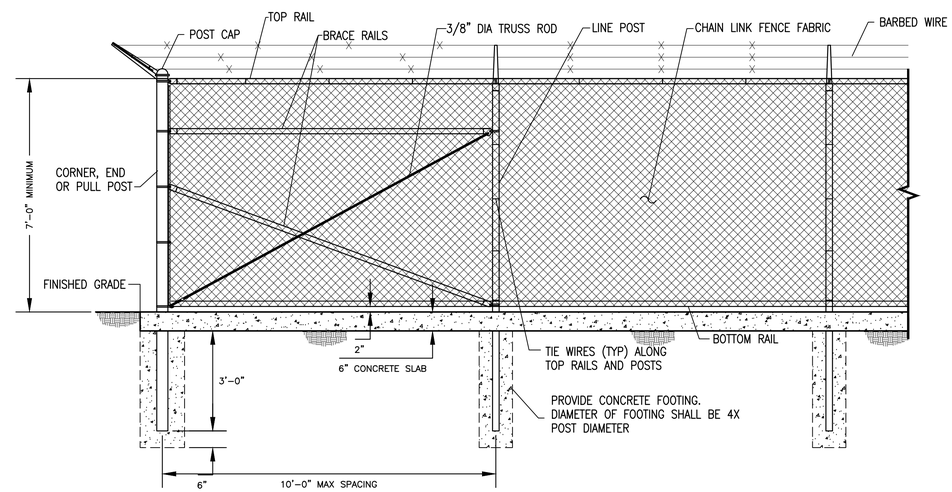

3 / C5.3 TYPICAL FENCE AND CORNER PANEL WITH 3 STRAND BARBED WIRE ELEVATION

CHAIN LINK FENCING NOTES

1. FABRIC: THE FENCE FABRIC SHALL BE ZINC OR ALUMINUM-COATED STEEL WIRE CHAIN LINK MATCH EXISTING TYPE WITH MESH OPENINGS NOT LARGER THAN TWO INCHES PER SIDE AND A TWISTED AND BARBED SELVAGE AT TOP AND BOTTOM IN ACCORDANCE WITH THE SPECIFICATIONS. UTILIZE 9-GAUGE FOR BASE INTERIOR FENCE. FABRIC MAY BE SALVAGED FROM EXISTING FENCE IF NO CUTS OR DAMAGE OCCURS DURING PROJECT WORK.
2. FABRIC TIES: ONLY 9-GAUGE STEEL TIES SHALL BE USED. COATING OR PLATING WILL BE ELECTROLYTICALLY COMPATIBLE WITH THE FENCE FABRIC TO INHIBIT CORROSION.
3. REINFORCEMENT: TENSION WIRES SHALL BE INSTALLED AND INTERWOVEN (OR AFFIXED WITH FABRIC TIES) ALONG THE TOP & BOTTOM OF THE FENCE FOR STABILIZATION OF THE FENCE FABRIC.
4. FENCE HEIGHT: CHAIN LINK FABRIC SHALL BE 7' IN HEIGHT WITH AN ADDITIONAL 1' IN HEIGHT COMPOSED OF 3 STRANDS OF BARBED WIRE AS REQUIRED. THE TOTAL FENCE HEIGHT IS EXPECTED TO BE APPROXIMATELY 8'.
5. GROUND CLEARANCE: BOTTOM OF THE FENCE FABRIC SHALL BE WITHIN TWO INCHES OF FIRM SOIL OR PAVEMENT.
6. TOP GUARDS: A TOP GUARD IS AN OVERHANG OF BARBED WIRED ALONG THE TOP OF A FENCE, FACING OUTWARD (AWAY FROM PROTECTED SITE) AND UPWARD AT APPROX. 45 ANGLE. TOP GUARD SUPPORTING ARMS WILL BE PERMANENTLY AFFIXED TO THE TOP OF FENCE POSTS TO INCREASE THE OVERALL HEIGHT OF THE FENCE AT LEAST 1 FOOT. THREE STRANDS OF 12-GAUGE BARBED WIRE, EQUALLY SPACED, SHALL BE INSTALLED ON THE SUPPORTING ARMS.
7. FENCE POSTS: SHALL BE ASTM F1043 OR F1083 ROUND PIPE AND SHALL BE GALVANIZED IN ACCORDANCE WITH THE SPECIFICATIONS. FENCE POST SPACING AND SIZE (DIAMETER) SHALL BE DETERMINED IN ACCORDANCE WITH CHAIN LINK FENCE MANUFACTURERS' INSTITUTE (WLG 2445). SPACING SHALL NOT EXCEED 10'-0" OC. SIZE (DIAMETER) SHALL NOT BE LESS THAN THAT SPECIFIED.
8. A BOTTOM RAIL SHALL BE INSTALLED 2" ABOVE GRADE. HARDWARE SHALL BE WELDED TO POSTS AND RAILS IN ORDER TO SECURE IN PLACE. ATTACH FABRIC TO BOTTOM RAIL.
9. ALL HARDWARE, GATE HINGES, LATCHES AND OTHER FASTENERS SHALL BE PERMANENTLY SECURED BY WELDING TO PROVIDE DISASSEMBLY. COAT ANY AFFECTED AREAS WITH COLD GALVANIZING.

DPW
FORT MCCOY, WI

MARK	MOD REQUEST # – DESCRIPTION	DATE	MOD #

SEH – TEPA ES JV, LLC
PHONE: 920.380.2830
329 JAY ST, SUITE 301
LA CROSSE, WI 54601

FORT McCOY
REPAIR SOUTH POST RESERVOIRS
FORT McCOY, WISCONSIN

FORT McCOY
DIRECTORATE OF PUBLIC WORKS
2171 SOUTH 8TH AVE.
FORT MC COY, WI 54656

CONSTRUCTION DETAILS

Designed by: SFA	Date: 3/5/2026
Dwn by: SFA	Ckd by: EDH	Rev.
Reviewed by: DMC	Work Order No 1612
Submitted by: DPW	Project Number 1503

SHEET NUMBER:
C5.3
SHEET 16 of 46

Plot date: 04/03/2026

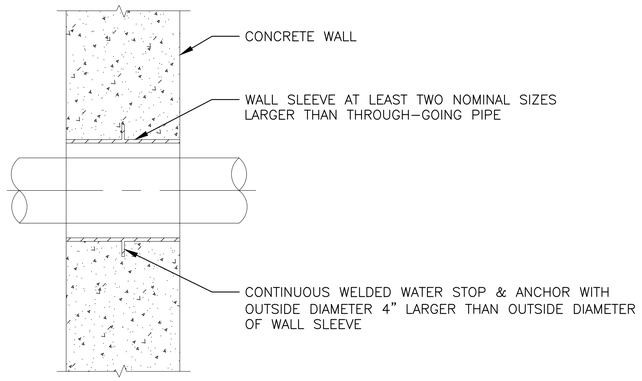

2 / C5.4 UNSEALED WALL SLEEVE DETAIL

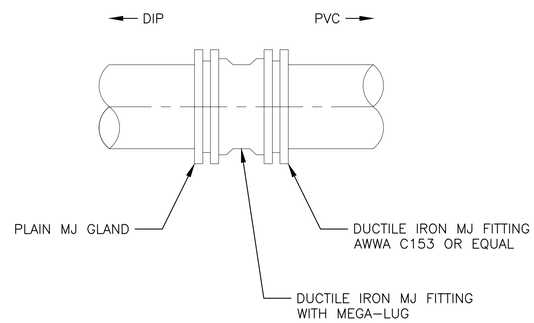

3 / C5.4 DIP/PVC TRANSITION

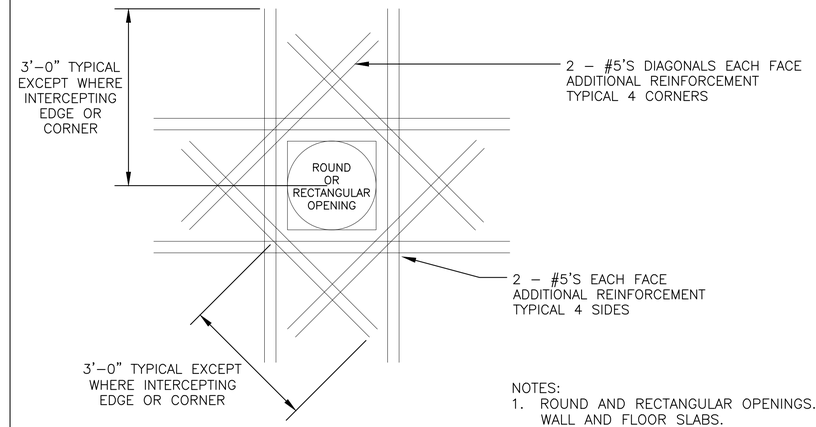

NOTES:
1. ROUND AND RECTANGULAR OPENINGS. WALL AND FLOOR SLABS.
2. CUT OR REPOSITION BARS AS REQUIRED TO MAINTAIN 2" CLEARANCE FROM CONCRETE EDGES.

4 / C5.4 OPENING REINFORCEMENT DETAIL

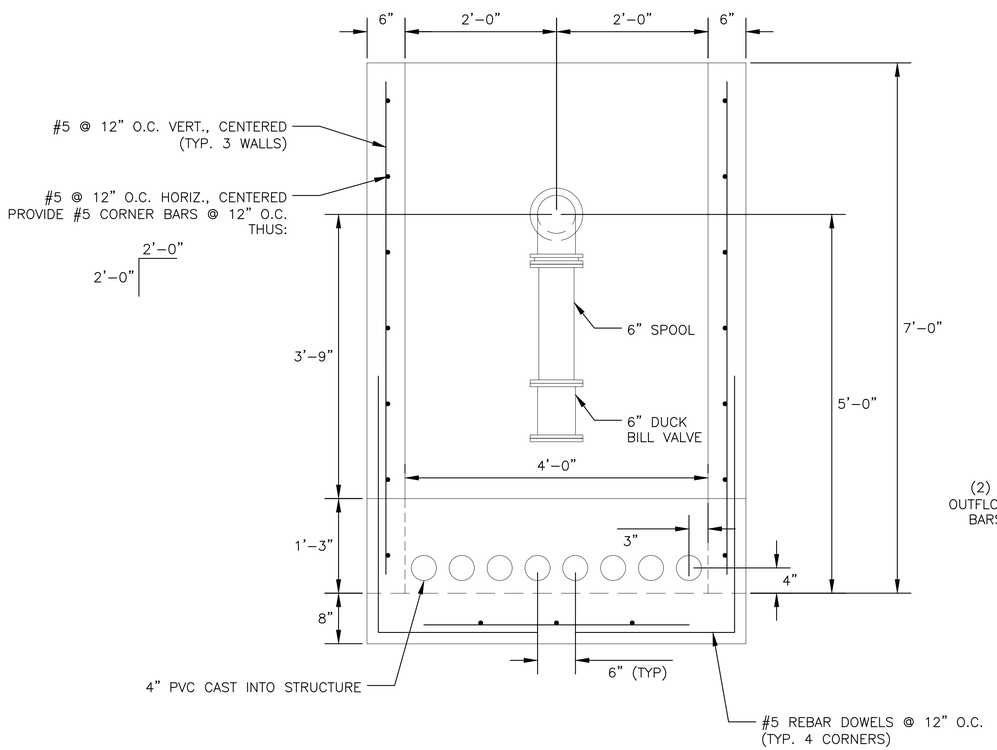

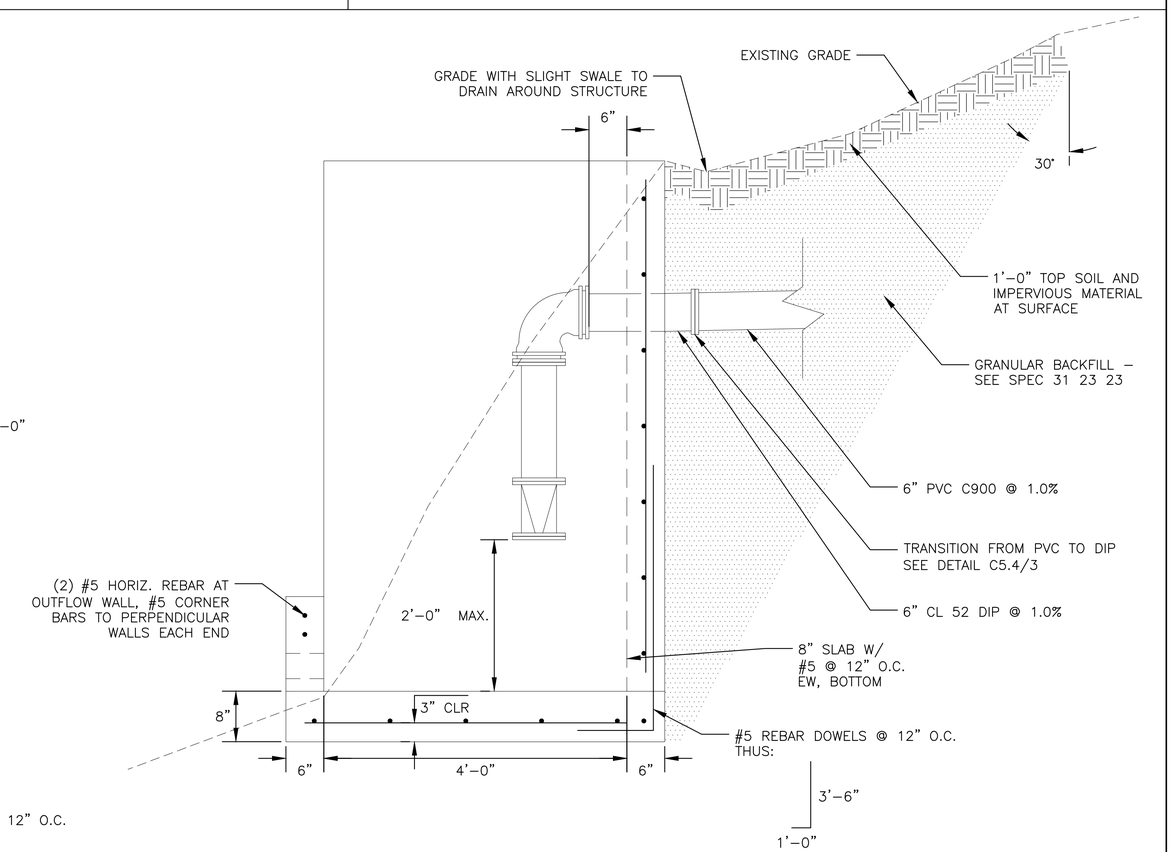

1 / C5.4 TANK DRAIN STRUCTURE

DPW
FORT MCCOY, WI

MARK	MOD REQUEST # – DESCRIPTION	DATE	MOD #

SEH – TEPA ES JV, LLC
PHONE: 920.380.2830
329 JAY ST, SUITE 301
LA CROSSE, WI 54601

FORT McCOY
REPAIR SOUTH POST RESERVOIRS
FORT McCOY, WISCONSIN

Designed by: SFA
Dwn by: SFA
Ckd by: EDH
Rev.
Reviewed by: DMC
Submitted by: DPW
Date: 3/5/2026
Work Order No 1612
Project Number 15O3

FORT McCOY
DIRECTORATE OF PUBLIC WORKS
2171 SOUTH 8TH AVE.
FORT MC COY, WI 54656

CONSTRUCTION DETAILS

SHEET NUMBER:
C5.4

Plot date: 04/03/2026

DEMOLITION PLAN NOTES:

(TYPICAL UNLESS NOTED OTHERWISE)

1. SEE DIVISION 02.
2. REFERENCE PRIOR INSPECTION REPORTS IN APPENDIX B FOR DETAILS OF TANK CONSTRUCTION AND APPURTENANCES.
3. DEMOLITION PLANS AND SECTIONS ARE ILLUSTRATIVE ONLY AND MAY NOT SHOW ALL TANK COMPONENTS AND APPURTENANCES. ITEMS SUCH AS FOUNDATIONS AND BURIED PIPING ARE NOT VISIBLE OR VERIFIABLE AND REPRESENT ASSUMED EXISTING CONDITIONS. CONTRACTOR IS RESPONSIBLE FOR REMOVING AND DISPOSING OF ALL EXISTING TANK MATERIALS AND FOUNDATIONS ACCORDING TO SPECIFICATIONS.

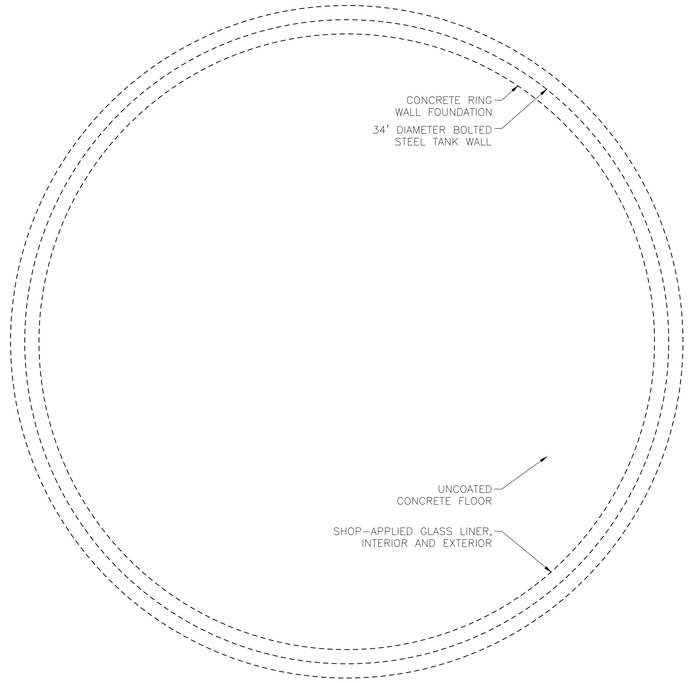

A DEMOLITION PLAN – 125,000 GAL. TANK
1/4" = 1'-0"

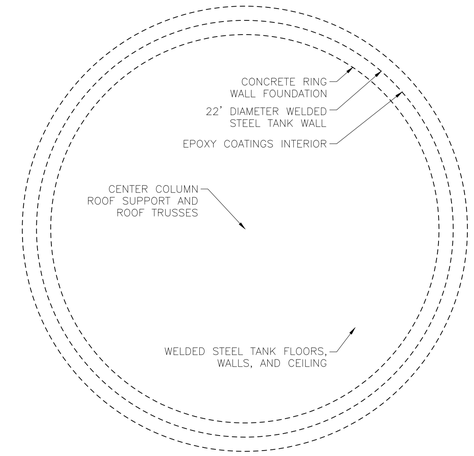

B DEMOLITION PLAN – 50,000 GAL. TANK
1/4" = 1'-0"

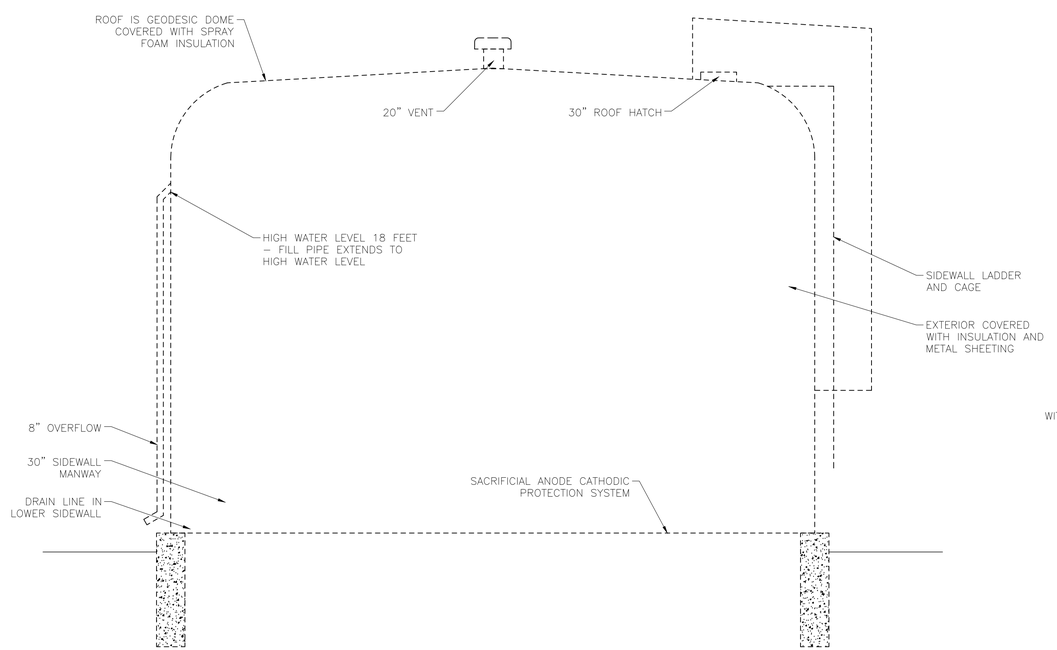

C DEMOLITION SECTION – 125,000 GAL. TANK
1/4" = 1'-0"

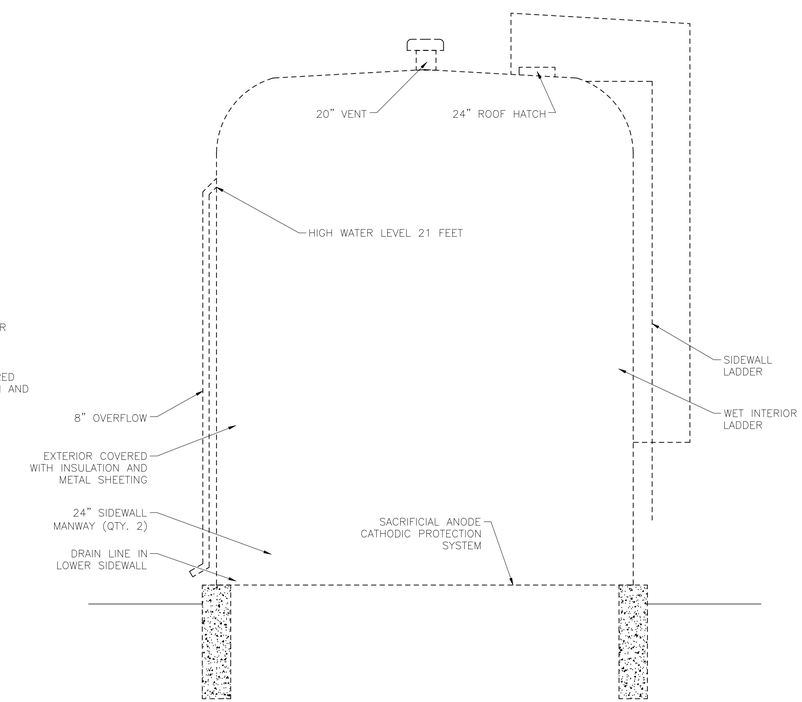

D DEMOLITION SECTION – 50,000 GAL. TANK
1/4" = 1'-0"

DPW
FORT MCCOY, WI

MARK	MOD REQUEST # – DESCRIPTION	DATE	MOD #

SEH – TEPA ES JV, LLC
PHONE: 920.380.2830
329 JAY ST, SUITE 301
LA CROSSE, WI 54601

FORT McCOY
REPAIR SOUTH POST RESERVOIRS
FORT McCOY, WISCONSIN

Designed by: BAW			Date: 3/5/2026
Dwn by: JAS	Ckd by: BAW		Rev.
Reviewed by:			Work Order No 1612
Submitted by: DPW			Project Number 1503

FORT McCOY
DIRECTORATE OF PUBLIC WORKS
2171 SOUTH 6TH AVE.
FORT MC COY, WI 54656

DEMOLITION PLAN AND DETAILS

SHEET NUMBER:
S0.1

Plot date: 03/02/2026

GENERAL STRUCTURAL NOTES

1. These notes do not replace the specifications but are to be read in conjunction with them. Any discrepancies or conflicts between the two shall be brought to the attention of the Contracting Officer's Representative (COR) for resolution.
2. These drawings are for the Fort McCoy Repair South Post Reservoirs project (SEH project number USAMC 181086) and no other use is authorized.

GOVERNING BUILDING CODE:

UFC 3–301–01 Structural Engineering, Change 4

2024 International Building Code as adopted and amended by the state building code

DESIGN CODES AND STANDARDS:

ACI Manual of Concrete Practice

ACI 318, 301 Building Code Requirements & Specifications for Structural Concrete

CRSI Manual of Standard Practice

ASCE 7–22 Minimum Design Loads for Buildings and Other Structures

DESIGN LOADS PER ASCE 7–22

Risk category IV

1. Live load (roof):	20 PSF
2. Dead load:	
Superimposed roof load	5 PSF
3. Liquid (water):	62.4 PCF
4. Snow loads (roof):	
Ground snow load	66 PSF
Roof snow load	49.9 PSF
Snow exposure factor	0.9 (Fully exposed)
Thermal factor	1.2 (Cold ventilated roof)
Rain loads	15–Minute Rainfall Intensity: 8.52 in/h
	60–Minute Rainfall Intensity: 4.21 in/h
5. Wind loads:	
Wind speed (3 sec gust)	119 mph
Wind exposure C	
Mean roof height	25 feet
Kd	0.85
Kzt	1.0
G	0.85 (rigid structure)
Structure is:	Enclosed
Internal press coef	+/–0.18
6. Seismic loads:	
Site class	D
Ss	0.062 g
S_1	0.044 g
Fa	1.6
Fv	2.4
Sds	0.067 g
Sd1	0.066 g
Ie	1.5
Seismic design category	A
7. Soil criteria:	
Allowable soil bearing pressure	4,000 PSF
Measured groundwater elevation	N/A
Dewater as required to keep excavations dry	
Frost depth	75 inches (unheated structure)
Anticipated max differential settlement	1/4 inch
Anticipated max total settlement	3/4 inch

DESIGN / CONSTRUCTION CRITERIA

1. The contractor shall verify dimensions and conditions before construction and notify the engineer of any discrepancies, inconsistencies, or difficulties affecting the work before proceeding.
2. All material, workmanship, and details shall be in accordance with typical competent construction practices, current manufacturer's recommendations, and all applicable codes and government regulations.
3. The contractor shall coordinate all disciplines, verifying size and location of all openings, whether shown on structural drawings or not, as called for on process, architectural, mechanical, electrical or other drawings. All conflicts, inconsistencies, or other difficulties affecting structural work shall be called to the architect and engineer's attention for direction before proceeding.
4. Equipment and structural anchor rod sizes, types, embedment, and patterns shall be verified with the manufacturer or fabricator. All anchor patterns shall be templated to ensure accuracy of placement.
5. The contractor shall supply all necessary temporary bracing, shoring, guying, or other means to avoid excessive stresses and to hold structural elements in place during construction.
6. Job site safety (including excavations) is the sole responsibility of the general contractor and their subcontractors.
7. The COR is not responsible for construction means, methods, techniques or practices. Where drawings and details imply this, they are provided to show final construction. If contractor desires to use different means and methods than implied by these drawings, submit similar details for review.
8. Standard or typical structural details are intended to illustrate design concepts and to specify material and required physical dimensions matching or similar to the referenced locations in the drawing set. Standard details apply whether or not they are cut on the drawings.
9. There is no provision for future vertical or horizontal expansion in the design.

FOUNDATIONS

1. CAUTION: Existing underground utilities may exist anywhere on the site. Notify owner and Digger's hotline (800) 242–8511 (Wisconsin) prior to disturbing any grade or excavation.
2. Material Definitions and Gradations:
   a. Sand Base: Provide 6" minimum sand cushion below tank floor. Use Sand Fill according to Specification 31 23 23.
   b. Granular Backfill Material: Provide around ringwall foundation excavation and below sand base per Concrete Ringwall Foundation Detail B/S1.1. Provide for soil corrections as required below ringwall foundation footings. Use Structural Fill according to Specification 31 23 23.
3. Structural foundations consist of wall and spread footings established on material capable of safely supporting 4,000 PSF recommended by Westwood Professional Services, Inc testing in Report No. R0060998.014 dated July 3, 2025. The structural engineer is not responsible for the accuracy or content of the subsurface soil conditions described in the specifications, test borings, or geotechnical report. A licensed geotechnical engineer shall be present during construction to test, inspect and verify all assumed soil conditions as required.
4. Away from walls, place fill in 8 inch loose lifts and compact to 98 percent Standard Proctor beneath foundations, 95 percent otherwise.
5. When placing compacted fill adjacent to foundation walls and piers, place backfill at equal rates on both sides to prevent overturning or structural damage.
6. Contractor shall provide for dewatering at excavations from either surface water or seepage.
7. Moisture content in soils beneath building locations should not be allowed to vary after footing excavations and after grading for slabs on grade are completed to a degree that would de–stabilize the compacted soil. If subgrade materials become desiccated or softened by water or other conditions, remove and replace with engineered fill as recommended by the geotechnical engineer. Do not place concrete on frozen ground, nor allow ground beneath foundations to freeze. All foundation work shall be placed on substrate approved and tested by geotechnical engineer of record.
8. Do not place backfill on frozen subgrade. Do not place frozen backfill.
9. Slabs on grade shall be constructed on a subgrade of native material compacted to at least 98 percent of its maximum dry density (standard proctor), and 6 inches of aggregate base below the slab compacted to 100 percent standard proctor density unless noted otherwise in geotechnical report.
10. Grading: where not specifically shown on the plans, it is intended that all excavated and backfilled areas shall be graded to slope away from buildings and other structures.

REQUIRED INSPECTION

1. Required inspection and testing is required according to the table below. Refer to Specifications for responsibilities. Contractor shall coordinate with COR, testing agency and geotechnical engineer throughout the project.
   - Required Inspection of reinforcing steel and anchor rod placement shall be performed prior to concrete placement or during anchor rod installation for adhesive anchors.
   - Continuous inspection during concrete placement is required.
   - Conduct concrete slump tests in accordance with ASTM C143.
   - Obtain set of a four (4) concrete test cylinders each time concrete is placed. Make test cylinders in accordance with ASTM C39.
   - Reports of Required Inspections shall be provided, at the frequency noted above, to the COR and Contractor by the firm contracted to perform Required Inspections.
   - Inspection criteria presented above and in specification shall apply to all footings and foundation walls but does not apply to non–structural slab on grade and site work concrete.

DESCRIPTION	TESTING		INSPECTING		NA
	YES	NO	YES	NO	
1 METAL CONSTRUCTION					•
2 CONCRETE CONSTRUCTION					
CONCRETE	•		•		
PRECAST/PRESTRESSED CONCRETE					•
REINFORCEMENT: SIZE AND SPACING		•	•		
BOLTS INSTALLED IN CONCRETE		•	•		
3 MASONRY CONSTRUCTION					•
4 WOOD CONSTRUCTION					•
5 GRADING, EXCAVATION AND FILLING	•		•		
6 PILING, PIERS AND CAISSONS					•
7 SPRAY–APPLIED FIREPROOFING					•
8 EXTERIOR INSULATION AND FINISH SYSTEM					•
9 SPECIAL CASES					•

DPW
FORT MCCOY, WI

MARK	MOD REQUEST # – DESCRIPTION	DATE	MOD #

SEH – TEPA ES JV, LLC
PHONE: 920.380.2630
329 JAY ST, SUITE 301
LA CROSSE, WI 54601

FORT McCOY
REPAIR SOUTH POST
RESERVOIRS
FORT McCOY, WISCONSIN

Designed by: BAW | Date: 3/5/2026
Dwn by: JAS | Ckd by: BAW | Rev.
Reviewed by: | Work Order No 1612
Submitted by: DPW | Project Number 1503

FORT McCOY
DIRECTORATE OF PUBLIC WORKS
2171 SOUTH 8TH AVE.
FORT MC COY, WI 54656

GENERAL STRUCTURAL NOTES

SHEET NUMBER:
S0.2

Plot date: 03/02/2026

FOUNDATION PLAN NOTES:

(TYPICAL UNLESS NOTED OTHERWISE)

1. SLAB BASE ELEVATION = 0'–0 1/4" (U.N.O.)
   (ELEVATIONS AT PERIMETER – SEE CIVIL FOR SPOT ELEVATIONS)
2. VERIFY ALL DIMENSIONS AND RESERVOIR LAYOUT AND OPENINGS WITH PROCESS DRAWINGS.
3. DESIGN ALLOWABLE SOIL BEARING CAPACITY: 4,000 psf (REF. GEOTECH REPORT)
4. PROCESS LINES THROUGH OR BELOW RINGWALL FOUNDATION – SEE C/S1.1 AND SHEET P1.3.
5. CONTRACTOR TO IMMEDIATELY CONTACT C.O.R. FOR FIELD VERIFICATION IF EXISTING CONDITIONS VARY FROM THOSE INDICATED IN THESE DOCUMENTS.

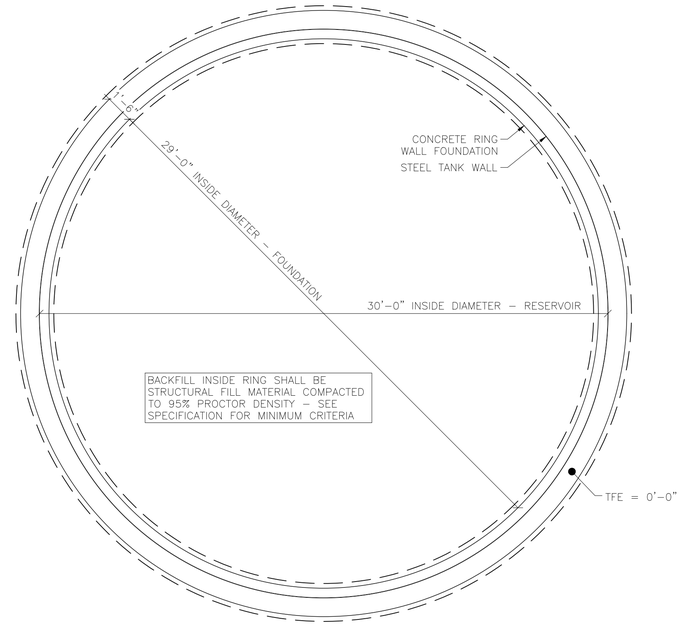

A WATER STORAGE RESERVOIR FOUNDATION PLAN

1/4" = 1'–0"

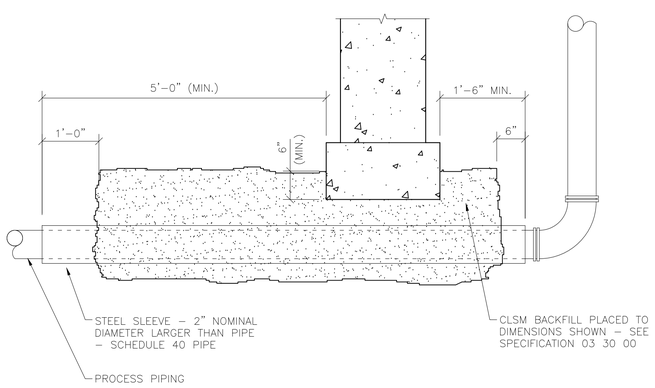

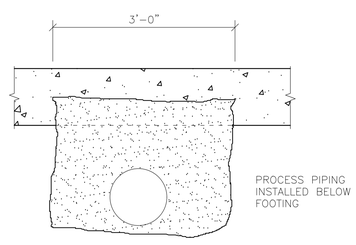

C UTILITY OPENING BELOW WALL DETAIL

3/4" = 1'–0"

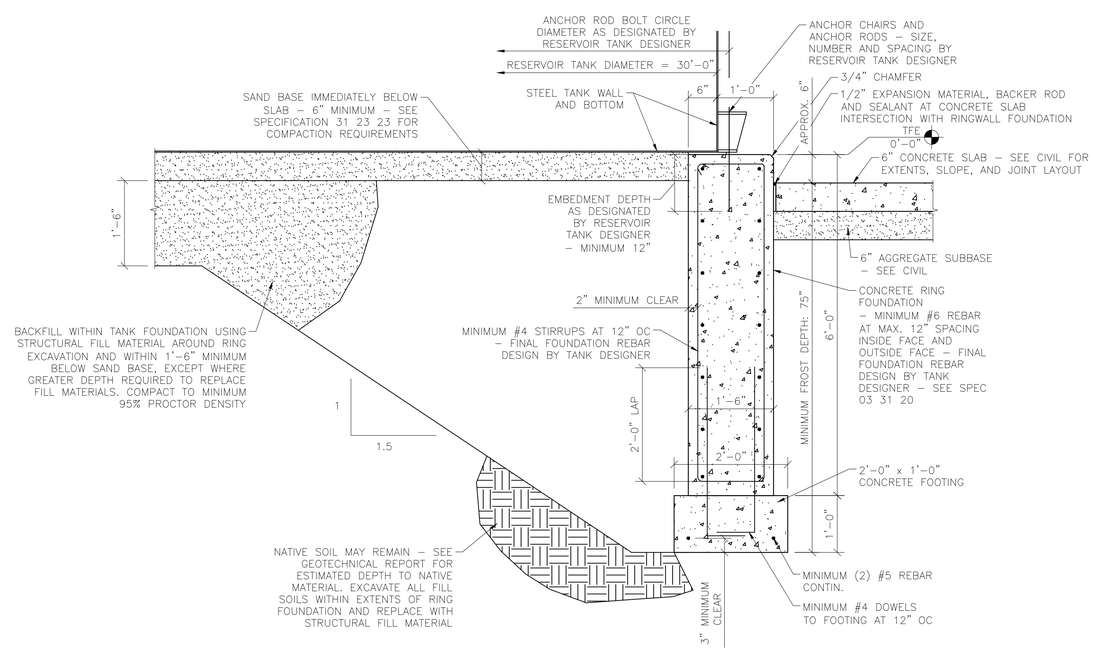

B CONCRETE RING WALL FOUNDATION DETAIL

3/4" = 1'–0"

DPW
FORT MCCOY, WI

MARK	MOD REQUEST # – DESCRIPTION	DATE	MOD #

SEH – TEPA ES JV, LLC
PHONE: 920.380.2830
329 JAY ST, SUITE 301
LA CROSSE, WI 54601

FORT McCOY
REPAIR SOUTH POST RESERVOIRS
FORT McCOY, WISCONSIN

Designed by: BAW	Date: 3/5/2026
Dwn by: JAS	Ckd by: BAW	Rev.
Reviewed by:	Work Order No 1612
Submitted by: DPW	Project Number 15O3

FORT McCOY
DIRECTORATE OF PUBLIC WORKS
2171 SOUTH 8TH AVE.
FORT MC COY, WI 54656

FOUNDATION PLAN AND DETAILS

SHEET NUMBER:
S1.1

SHEET 20 of 46

Plot date: 03/02/2026

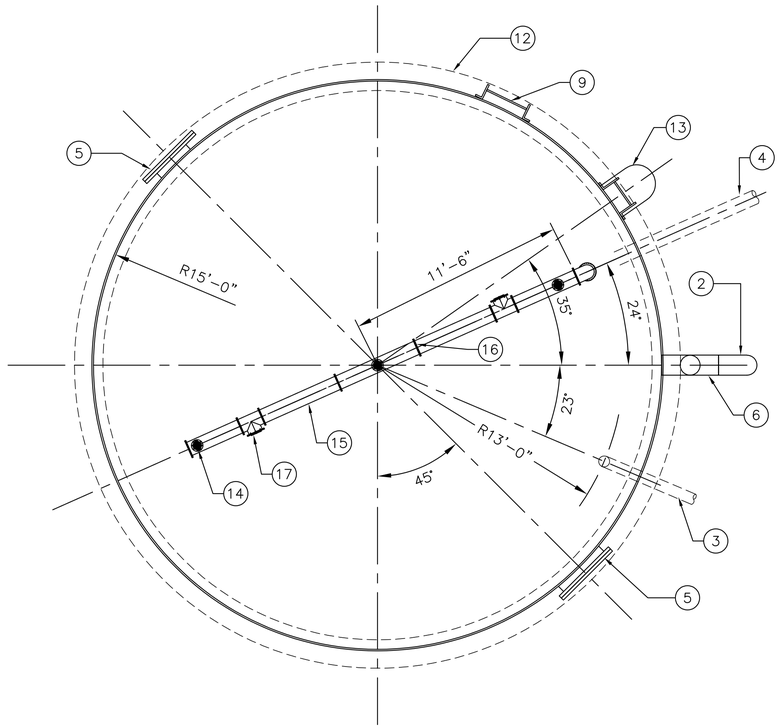

N 1 NEW TANK 01 (WEST)
WATER STORAGE RESERVOIR ORIENTATION PLAN

Scale: 1/4"=1'-0"

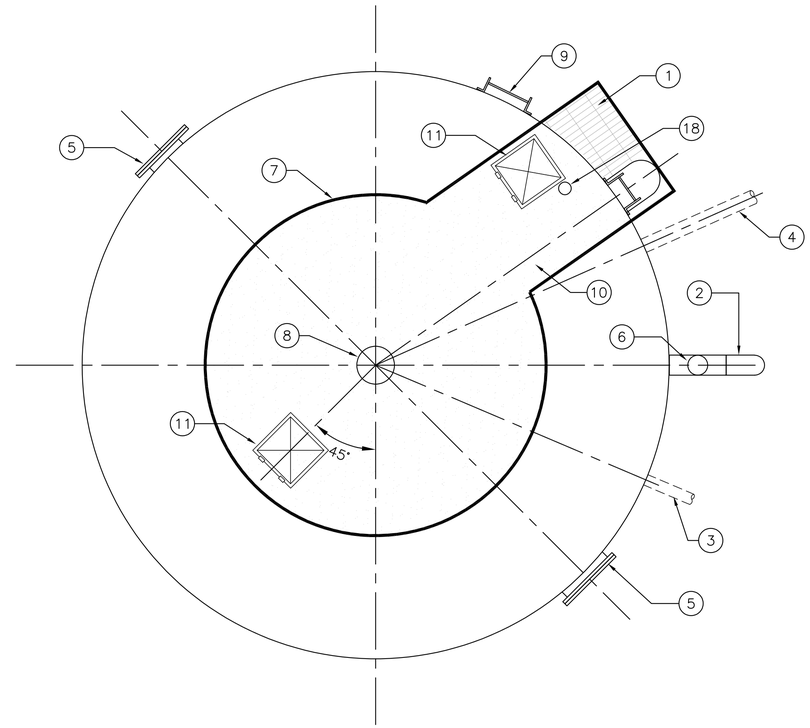

N 2 NEW TANK 01 (WEST)
WATER STORAGE RESERVOIR ORIENTATION PLAN

Scale: 1/4"=1'-0"

KEYNOTES

1. UPPER PLATFORM – SEE DETAIL B/P5.1
2. OVERFLOW BEND WITH #24 STAINLESS STEEL SCREEN
3. 6" TANK DRAIN
4. WATER MAIN. SEE CIVIL SITE PLAN FOR CONTINUATION.
5. 36" DIAMETER SHELL MANWAY – SEE DETAIL G/P5.1
6. 10" OVERFLOW PIPE
7. 18'-0" DIAMETER HANDRAIL – SEE DETAIL F/P5.1
8. PRESSURE VACUUM VENT – SEE DETAIL E/P5.1
9. CABLE ROUTING / MOUNTING SUPPORTS ADJACENT TO LADDER.
10. NON SKID SURFACE WITHIN HANDRAIL AREA
11. 30" SQUARE ROOF ACCESS HATCH– SEE DETAIL D/P5.2
12. TANK FOUNDATION WALL. SEE B/S1.1
13. CAGED LADDER – SEE DETAIL A/P5.2
14. TIDEFLEX INLET NOZZLE. TYP
15. 8" DIA MANIFOLD
16. PIPE SUPPORT. TYP. SEE C/P5.1
17. WATERFLEX OUTLET VALVE. TYP
18. JUNCTION BOX / PENETRATION FOR LEVEL TRANSDUCER

NOTE: ORIENTATION OF WATER MAIN, OVERFLOW, LADDER, ETC. WILL BE UPDATED TO MEET SITE REQUIREMENTS.

DPW
FORT MCCOY, WI

MARK	MOD REQUEST # - DESCRIPTION	DATE	MOD #

SEH – TEPA ES JV, LLC
PHONE: 920.380.2830
329 JAY ST, SUITE 301
LA CROSSE, WI 54601

FORT McCOY
REPAIR SOUTH POST
RESERVOIRS
FORT McCOY, WISCONSIN

Date: 3/5/2026
Designed by: JMN
Drn by: KAK
Ckd by: MN
Reviewed by:
Rev.
Submitted by: DPW
Work Order No 1612
Project Number 1503

FORT McCOY
DIRECTORATE OF PUBLIC WORKS
2171 SOUTH 8TH AVE.
FORT MC COY, WI 54656

NEW TANK 01 (WEST)
ORIENTATION PLAN PHASE 1

SHEET NUMBER:
P1.1

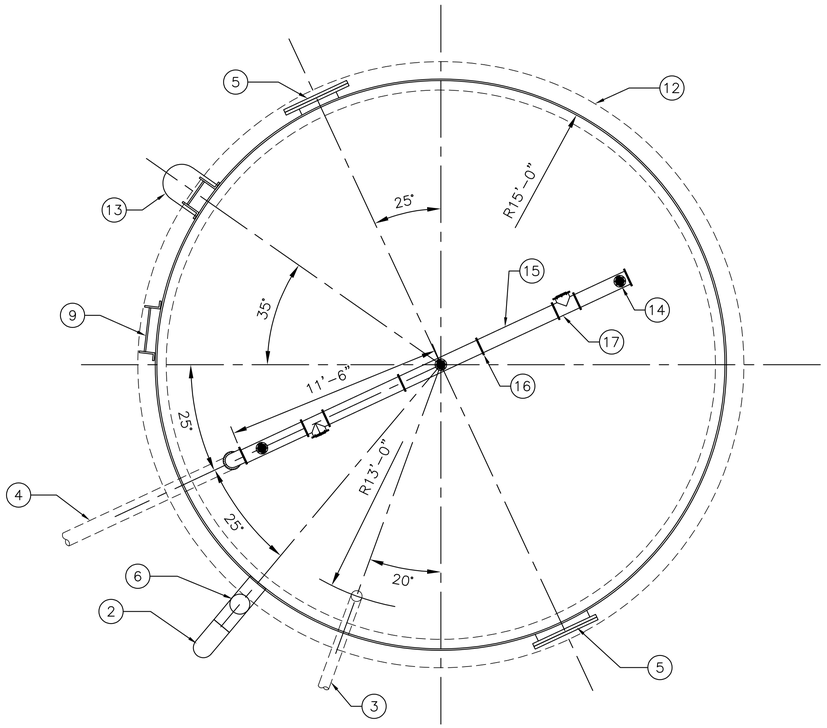

N 1

NEW TANK 02 (EAST)
WATER STORAGE RESERVOIR ORIENTATION PLAN

Scale: 1/4"=1'-0"

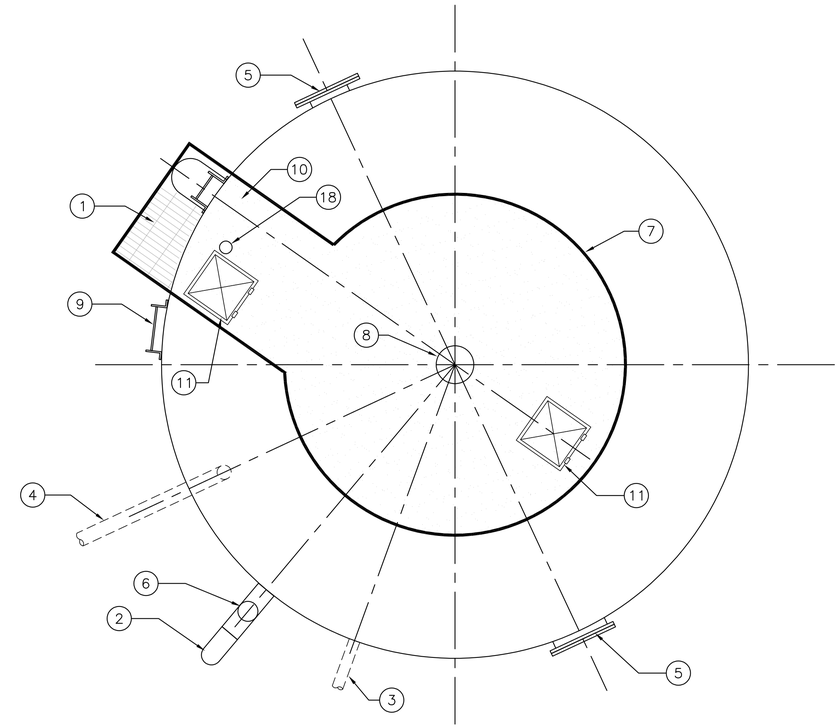

N 2

NEW TANK 02 (EAST)
WATER STORAGE RESERVOIR ORIENTATION PLAN

Scale: 1/4"=1'-0"

KEYNOTES

1. UPPER PLATFORM – SEE DETAIL B/P5.1
2. OVERFLOW BEND WITH #24 STAINLESS STEEL SCREEN
3. 6" TANK DRAIN
4. WATER MAIN. SEE CIVIL SITE PLAN FOR CONTINUATION.
5. 36" DIAMETER SHELL MANWAY – SEE DETAIL G/P5.1
6. 10" OVERFLOW PIPE
7. 18'-0" DIAMETER HANDRAIL – SEE DETAIL F/P5.1
8. PRESSURE VACUUM VENT – SEE DETAIL E/P5.1
9. CABLE ROUTING / MOUNTING SUPPORTS ADJACENT TO LADDER.
10. NON SKID SURFACE WITHIN HANDRAIL AREA
11. 30" SQUARE ROOF ACCESS HATCH– SEE DETAIL D/P5.2
12. TANK FOUNDATION WALL. SEE B/S1.1
13. CAGED LADDER – SEE DETAIL A/P5.2
14. TIDEFLEX INLET NOZZLE. TYP
15. 8" DIA MANIFOLD
16. PIPE SUPPORT. TYP. SEE C/P5.1
17. WATERFLEX OUTLET VALVE. TYP
18. JUNCTION BOX / PENETRATION FOR LEVEL TRANSDUCER

NOTE: ORIENTATION OF WATER MAIN, OVERFLOW, LADDER, ETC. WILL BE UPDATED TO MEET SITE REQUIREMENTS.

DPW
FORT MCCOY, WI

MARK	MOD REQUEST # - DESCRIPTION	DATE	MOD #

SEH – TEPA ES JV, LLC
PHONE: 920.380.2830
329 JAY ST, SUITE 301
LA CROSSE, WI 54601

FORT McCOY
REPAIR SOUTH POST
RESERVOIRS
FORT McCOY, WISCONSIN

Designed by: JNN		Date: 3/5/2026	
Dwn by: KAK	Ckd by: MN	Rev.	
Reviewed by:		Work Order No 1612	
Submitted by: DPW		Project Number 1503	

FORT McCOY
DIRECTORATE OF PUBLIC WORKS
2171 SOUTH 8TH AVE.
FORT MC COY, WI 54656

NEW TANK 02 (EAST)
ORIENTATION PLAN PHASE 2

SHEET NUMBER:
P1.2

NOTE: REFER TO PLAN VIEW FOR ORIENTATIONS.

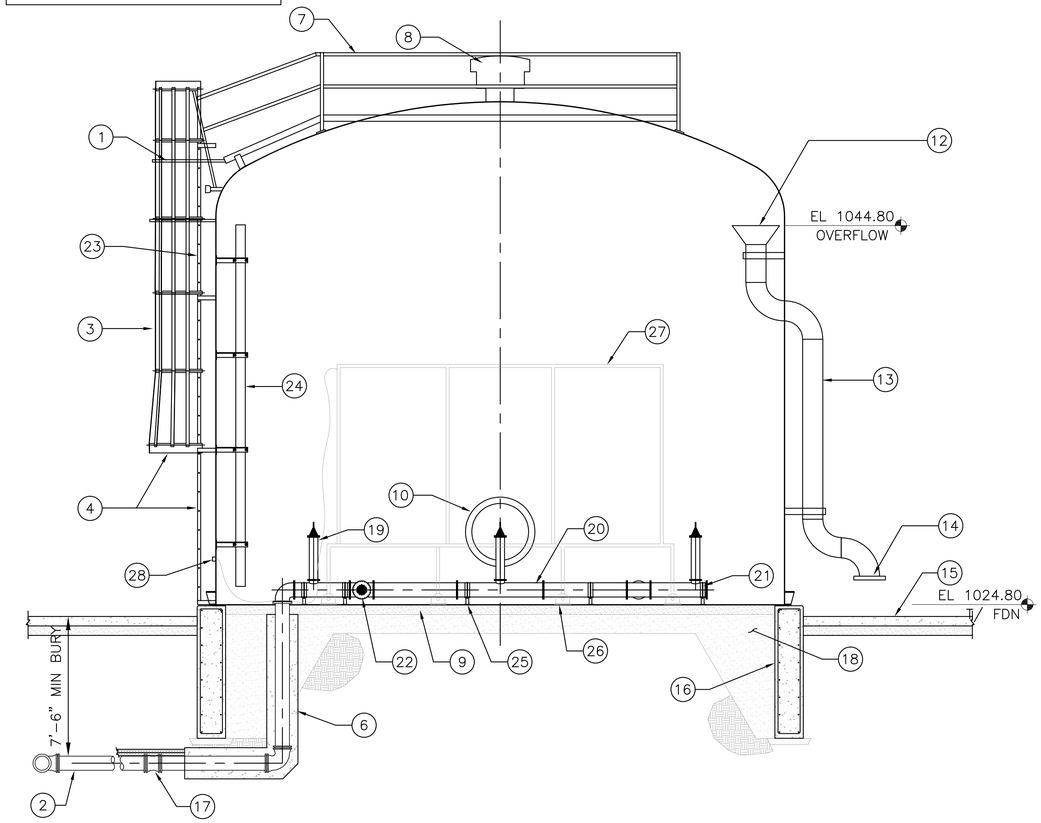

A P1.3 WATER STORAGE RESERVOIR TYPICAL SECTION
SCALE: 1/4" = 1'-0"

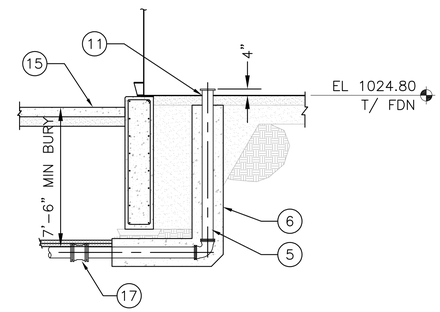

B P1.3 DRAIN TYPICAL DETAIL
SCALE: 1/4" = 1'-0"

KEYNOTES

1. UPPER PLATFORM – SEE DETAIL B/P5.1
2. WATER MAIN. SEE CIVIL SITE PLAN FOR CONTINUATION.
3. CAGED LADDER – SEE DETAIL A/P5.2
4. LADDER SHIELD AND LOCKABLE LADDER GATE
5. 6" TANK DRAIN W/ 4 INCHES OF INSULATION COVERING EXTERIOR WATER MAIN FROM TANK TO VALVE
6. CONCRETE PIPE ENCASEMENT
7. HANDRAIL – SEE DETAIL F/P5.1
8. PRESSURE VACUUM VENT – SEE DETAIL E/P5.1
9. 6" SAND BACKFILL
10. 36" DIAMETER SHELL MANWAY – SEE DETAIL G/P5.1
11. REMOVABLE SILT STOP
12. OVERFLOW WEIR BOX WITH VORTEX BREAKER
13. 10" OVERFLOW PIPE
14. OVERFLOW BEND WITH #4 AND #24 STAINLESS STEEL SCREEN, TERMINATE 12 TO 24 INCHES ABOVE GRADE
15. CONCRETE APRON. SEE CIVIL SHEETS
16. TANK FOUNDATION WALL. SEE B/S1.1
17. 8" FLEX–TEND FORCE BALANCED FLEXIBLE EXPANSION JOINT, ROMAC INDUSTRIES FJ RESTRAINT OR EQUAL.
18. GRANULAR BACKFILL MATERIAL. SEE DETAIL B/S1.1 ON STRUCTURAL SHEETS.
19. TIDEFLEX INLET NOZZLE. TYP
20. 8" DIA MANIFOLD
21. PIPE SUPPORT. TYP. SEE C/P5.1
22. WATERFLEX OUTLET VALVE. TYP
23. LADDER FALL ARREST SAFETY DEVICE
24. LEVEL TRANSDUCER STILLING TUBE AND MOUNTS, 3" x 3" x 3/8" ANGLE STANDOFFS, 20 INCHES FROM TANK WALL, SPACED 5 FEET. (MAX), ACCESSIBLE FROM ROOF HATCH. SEE B/P5.2
25. PIPE SUPPORT. TYP. MINIMUM OF 5. SEE C/P5.1
26. CATHODIC PROTECTION MOUNT (QTY 8) 2x6x1/2–INCH TAB WITH 3/4" HOLE CENTERED 4" ABOVE BASEPLATE, WELDED ON 4x4x3/8–INCH BASEPLATE, ROUNDED CORNERS AND EDGES, COORDINATE LOCATIONS. SEE EC SHEETS
27. CATHODIC PROTECTION SYSTEM. SEE EC SHEETS
28. CATHODIC PROTECTION PENETRATION (QTY OF 4). (2) 3/4" STEEL NPT FEMALE COUPLING WELDED TO TANK, (2) 1" NPT COUPLING WELED TO TANK. SEE EC SHEETS

DPW
FORT MCCOY, WI

MARK	MOD REQUEST # - DESCRIPTION	DATE	MOD #

SEH – TEPA ES JV, LLC
PHONE: 920.380.2830
329 JAY ST, SUITE 301
LA CROSSE, WI 54601

FORT McCOY
REPAIR SOUTH POST
RESERVOIRS
FORT McCOY, WISCONSIN

Designed by: JNN
Dwn by: KAK
Ckd by: MN
Reviewed by:
Submitted by: DPW
Date: 3/5/2026
Rev.
Work Order No 16/12
Project Number 15/03

FORT McCOY
DIRECTORATE OF PUBLIC WORKS
2171 SOUTH 6TH AVE.
FORT MC COY, WI 54656

PROCESS SECTIONS

SHEET NUMBER:
P1.3

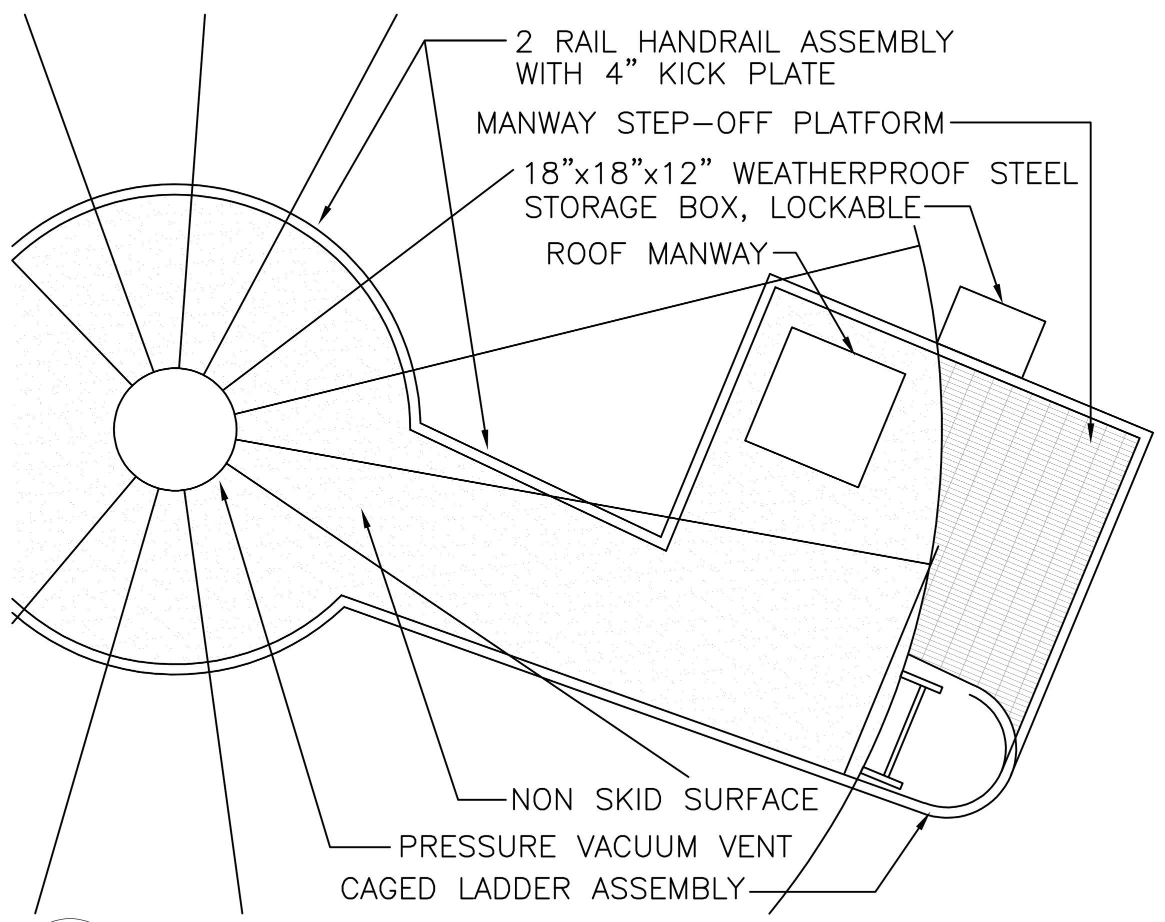

A P5.1 ROOF WALKWAY ASSEMBLY DETAIL
SCALE: NONE

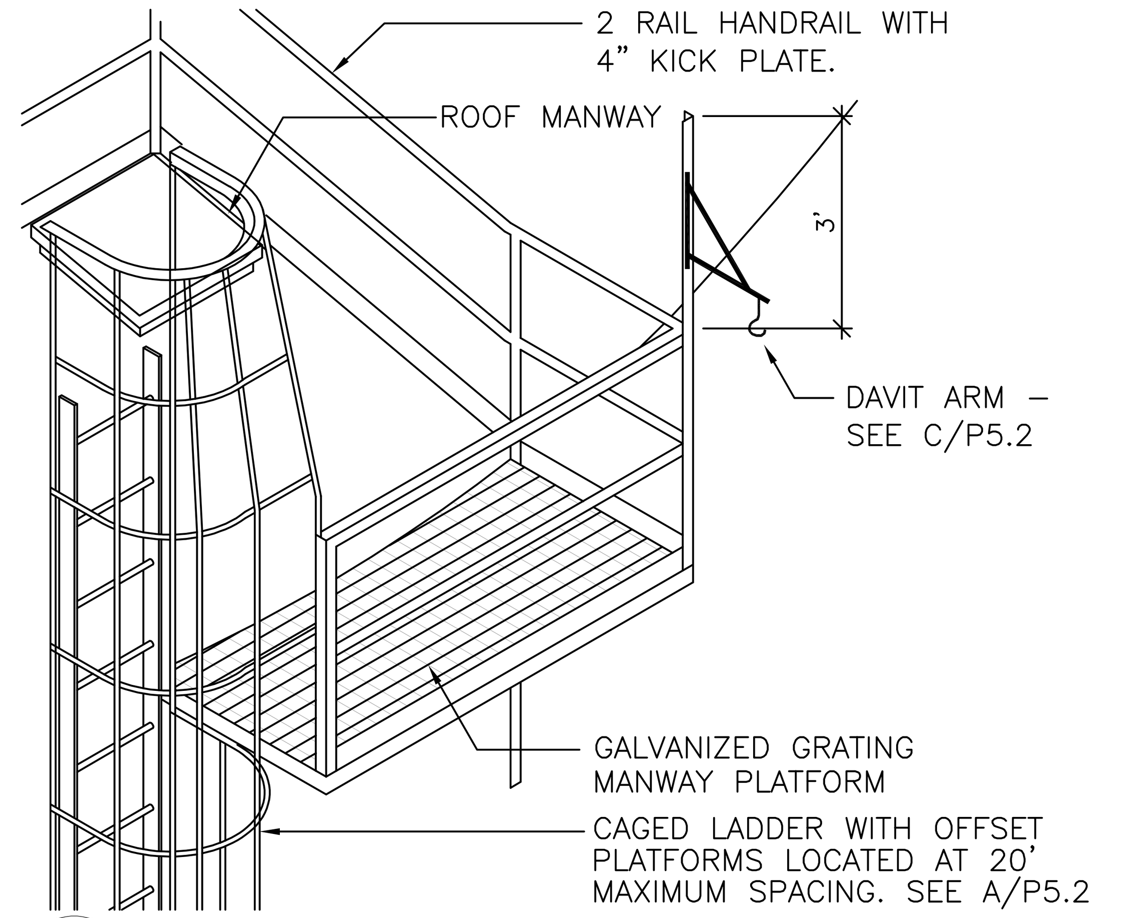

B P5.1 CAGED LADDER AND PLATFORM DETAIL
SCALE: NONE

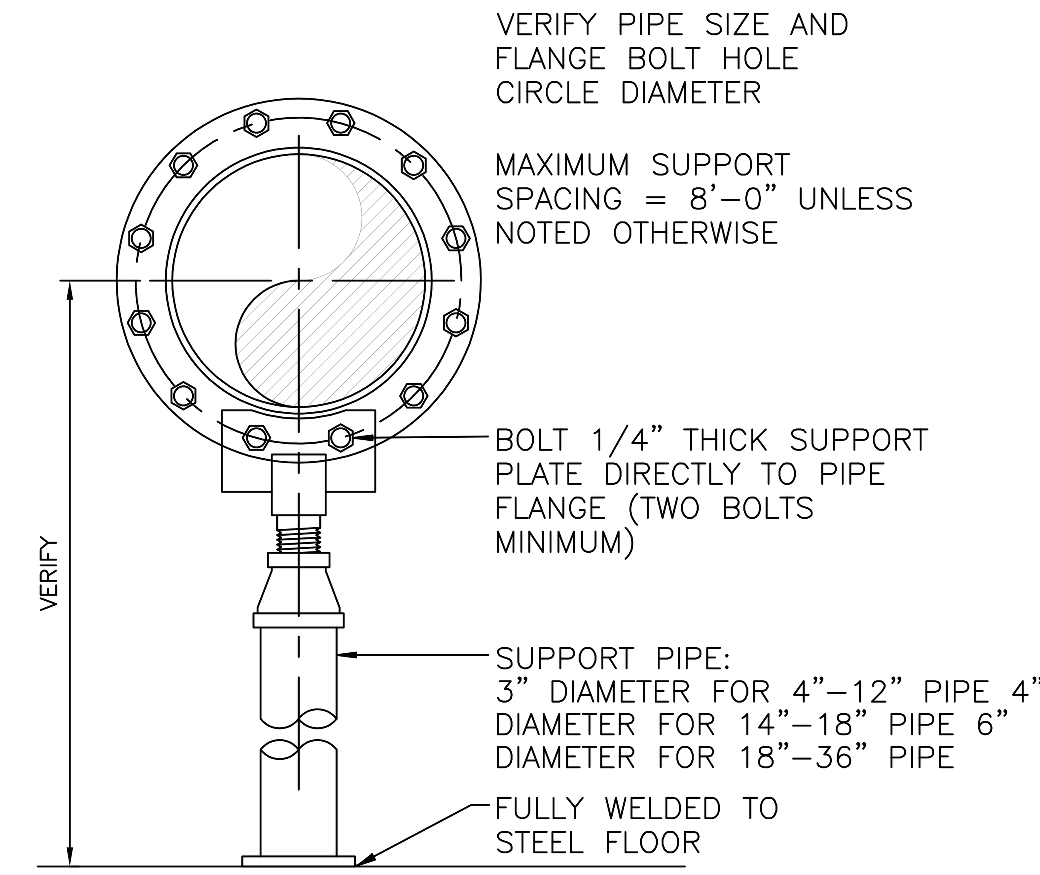

C P5.1 PIPE SUPPORT FROM FLOOR DETAIL
SCALE: NONE

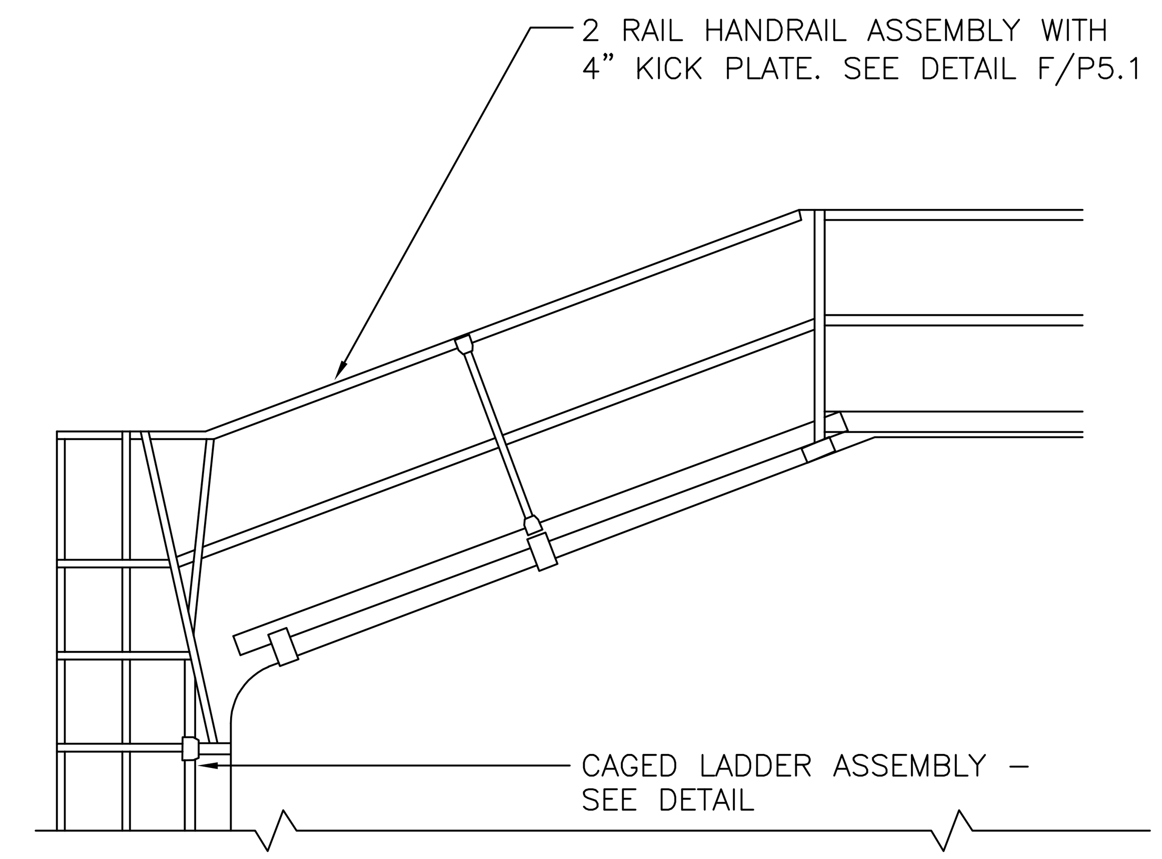

D P5.1 ROOF HANDRAIL ASSEMBLY DETAIL
SCALE: NONE

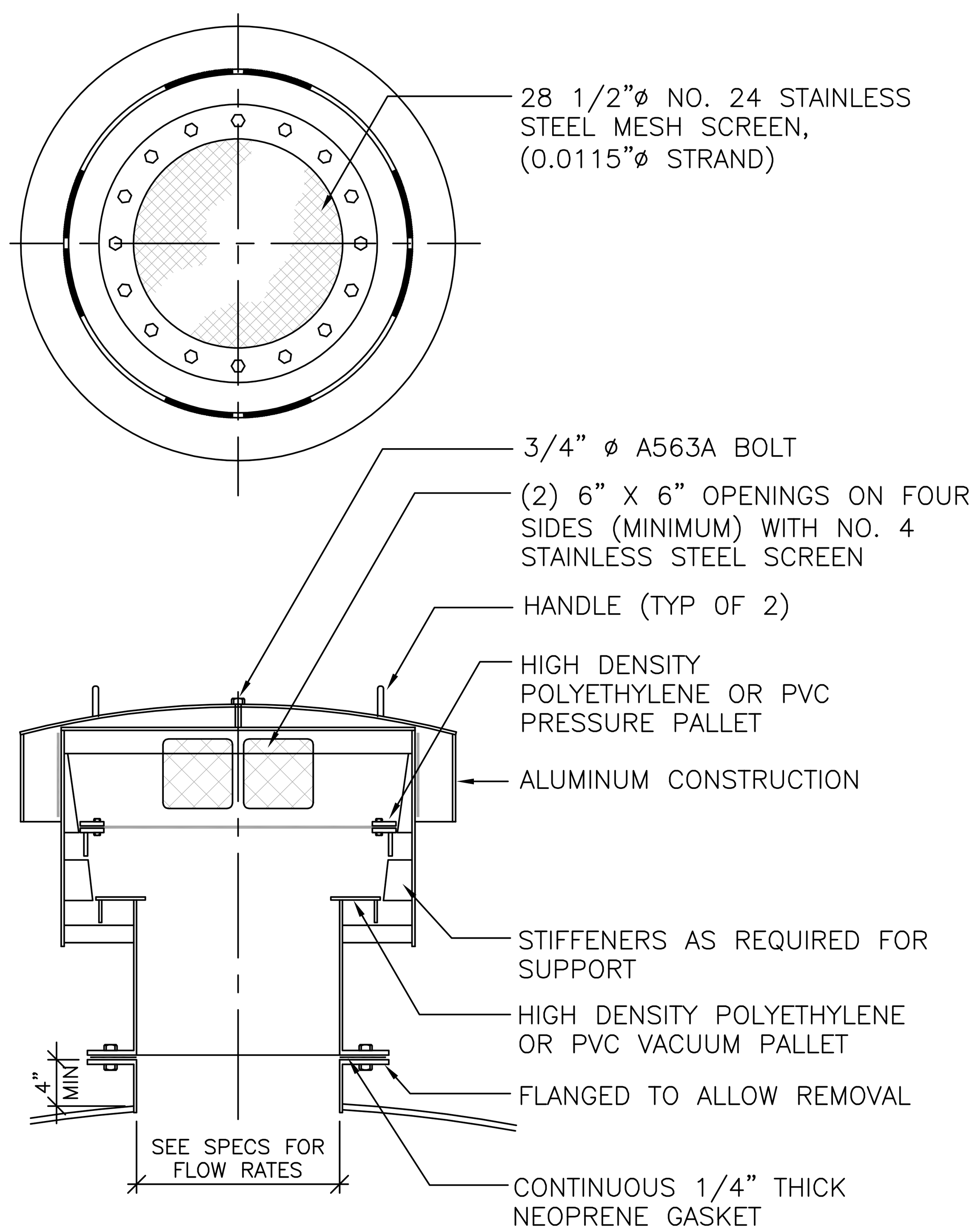

E P5.1 PRESSURE VACUUM VENT DETAIL
SCALE: NONE

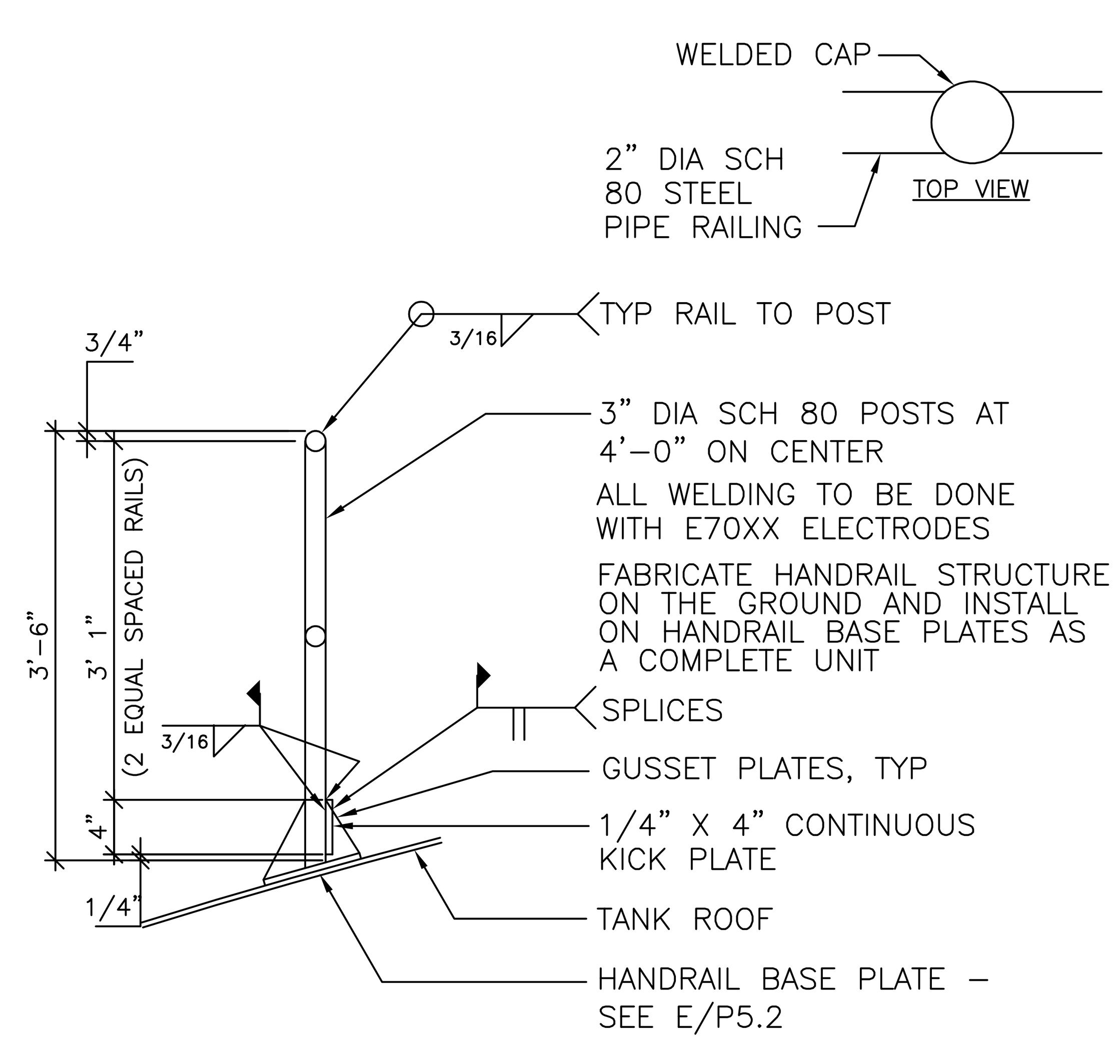

F P5.1 HANDRAIL DETAIL
SCALE: NONE

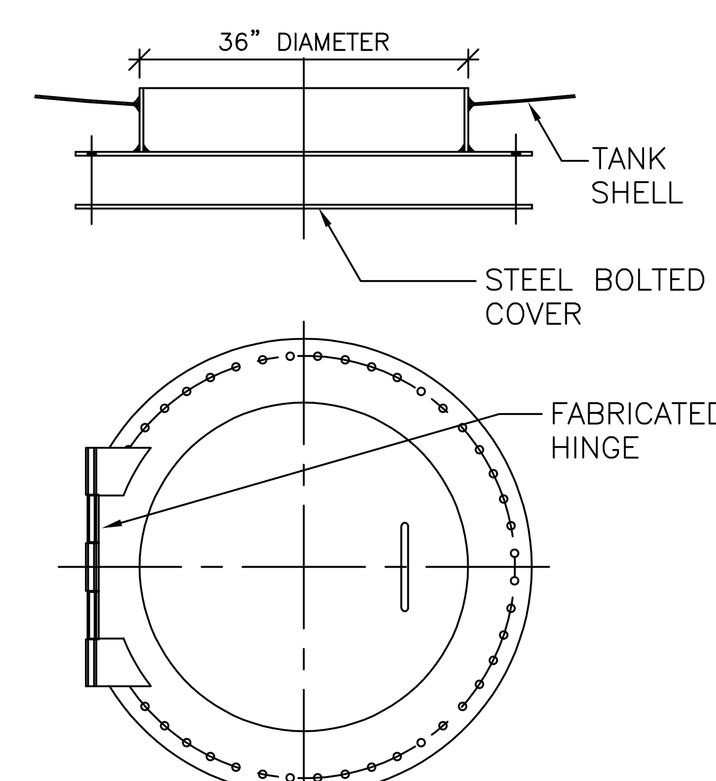

G P5.1 SHELL MANWAY DETAIL
SCALE: NONE

DPW
FORT McCOY, WI

MARK	MOD REQUEST # - DESCRIPTION	DATE	MOD #

SEH - TEPA ES JV, LLC
PHONE: 920.380.2830
329 JAY ST, SUITE 301
LA CROSSE, WI 54601

FORT McCOY
REPAIR SOUTH POST RESERVOIRS
FORT McCOY, WISCONSIN

Designed by: JNN
Drn by: KAK
Ckd by: MIN
Reviewed by:
Submitted by: DPW
Date: 3/5/2026
Rev.
Work Order No: 1612
Project Number: 1503

FORT McCOY
DIRECTORATE OF PUBLIC WORKS
2171 SOUTH 8TH AVE.
FORT MC COY, WI 54656

PROCESS DETAILS

SHEET NUMBER:
P5.1
SHEET 24 of 46

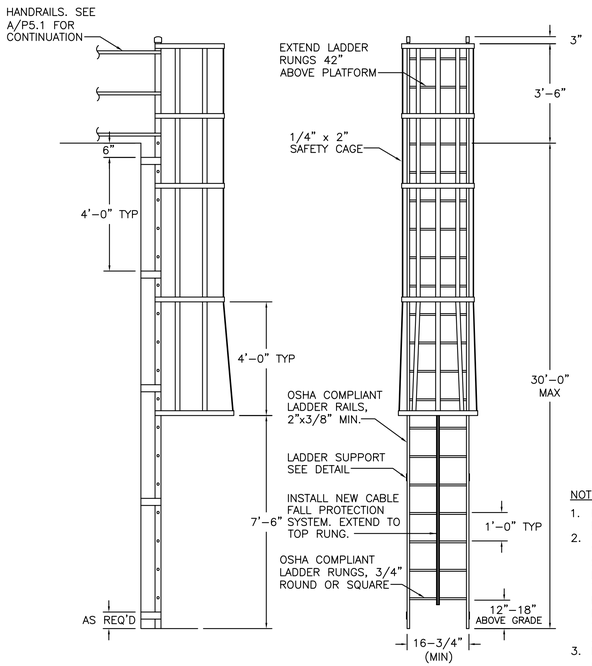

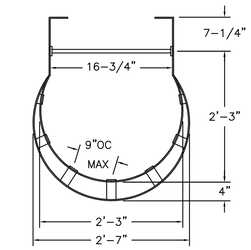

PLAN
(HANDRAILS OMITTED FOR CLARITY)

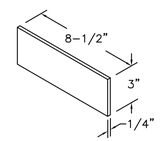

LADDER SUPPORTS DETAIL

NOTES:

1. FIELD VERIFY LADDER EXTENTS, ALL DIMENSIONS AND OTHER REQUIREMENTS PRIOR TO FABRICATION OR CONSTRUCTION.
2. THE SHELL LADDER SHALL BE DESIGNED IN ACCORDANCE WITH THE DESIGN CRITERIA SET FORTH IN THE SPECIFICATIONS AND APPLICABLE OSHA GUIDELINES. THE LADDER MUST BE CAPABLE OF WITHSTANDING FORCES FROM THE CABLE FALL PROTECTION SYSTEM. FOLLOWING IS THE REQUIRED DESIGN LOAD ON THE TOP BRACKET/CONNECTION PER NUMBER OF USERS ON THE SYSTEM:
   1 PERSON: 3,375 lbs.
   2 PERSONS: 4,350 lbs.
3. INSTALL (1) LOCKABLE CLIMB PREVENTION SHIELD (LADDER GATE BY R.B. INDUSTRIES, OR EQUAL) PER MANUFACTURERS RECOMMENDATIONS. COORDINATE SHIELD LOCATION WITH THE ENGINEER AND/OR OWNER.

A P5.2 CAGED LADDER ASSEMBLY DETAIL
SCALE: NONE

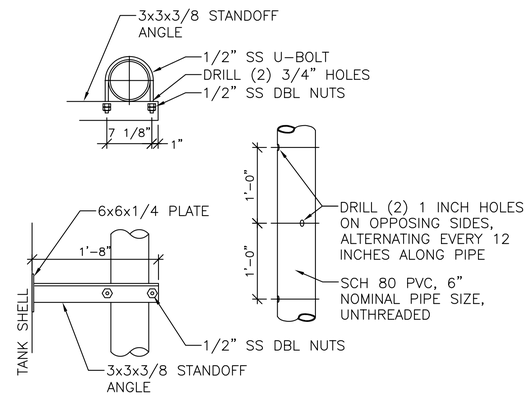

B P5.2 STILLING TUBE DETAIL
SCALE: NONE

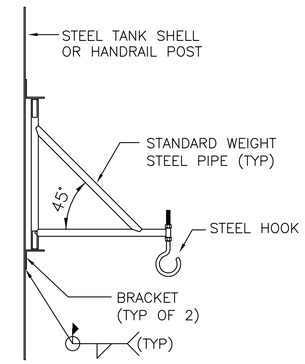

C P5.2 DAVIT ARM DETAIL
SCALE: NONE

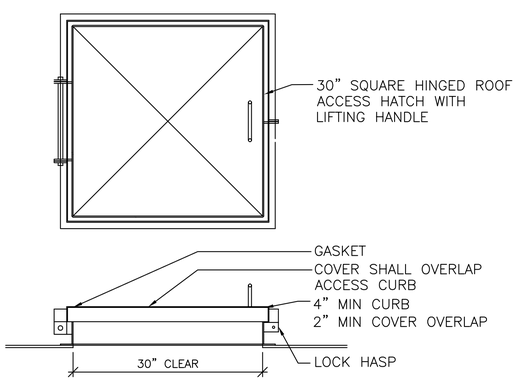

D P5.2 30" SQUARE ROOF ACCESS HATCH DETAIL
SCALE: NONE

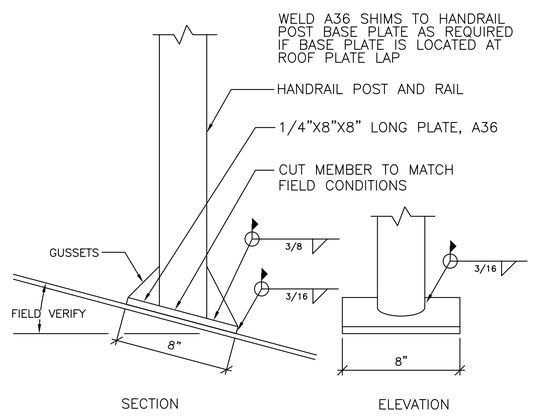

E P5.2 HANDRAIL BASE PLATE DETAIL
SCALE: NONE

DPW
FORT MCCOY, WI

MARK	MOD REQUEST # - DESCRIPTION	DATE	MOD #

SEH — TEPA ES JV, LLC
PHONE: 920.380.2830
329 JAY ST, SUITE 301
LA CROSSE, WI 54601

FORT McCOY
REPAIR SOUTH POST RESERVOIRS
FORT McCOY, WISCONSIN

Designed by: JNN | Date: 3/5/2026
Dwn by: KAK | Ckd by: MN | Rev.
Reviewed by: | Work Order No 1612
Submitted by: DPW | Project Number 1503

FORT McCOY
DIRECTORATE OF PUBLIC WORKS
2171 SOUTH 6TH AVE.
FORT MC COY, WI 54656

PROCESS DETAILS

SHEET NUMBER:
P5.2
SHEET 25 of 46

ELECTRICAL SYMBOL LEGEND

LIGHTING

SYMBOL	DESCRIPTION
	SURFACE LIGHT (TYPE DENOTED)
	WALL MOUNTED FLOODLIGHT (TYPE DENOTED)
	RECESSED LIGHT (TYPE DENOTED)
	POLE MOUNTED LIGHT (TYPE DENOTED)
	POLE MOUNTED FLOODLIGHT (TYPE DENOTED)
	SURFACE LINEAR LIGHT (TYPE DENOTED)
	SUSPENDED OR PENDANT LIGHT (TYPE DENOTED)
	RECESSED LINEAR LIGHT (TYPE DENOTED)
	STRIP LIGHT (TYPE DENOTED)
	TRACK AND TRACK LIGHT (TYPES DENOTED)
	EMERGENCY BATTERY LIGHT (TYPE DENOTED)
	EXIT SIGN (TYPE DENOTED)
	LIGHT FIXTURE ON EMERGENCY CIRCUIT
$	SINGLE POLE SW.
$2	2 POLE SINGLE THROW SW.
$3	3-WAY SW.
$4	4-WAY SW.
$K	KEYED SW.
$P	SW. W/PILOT
$D	DIMMER SWITCH
$OS	OCCUPANCY SENSOR SWITCH
$M	MANUAL MOTOR STARTER SWITCH
$WP	WEATHER PROOF SWITCH
$T	TIMER SWITCH
$MC	MOMENTARY CONTACT SWITCH
$TD	TIME DELAY SWITCH
OS	OCCUPANCY SENSOR - TYPE DENOTED
LS	LIGHT LEVEL SENSOR - TYPE DENOTED
P	PHOTOCELL

SYSTEMS

SYMBOL	DESCRIPTION
	TELEPHONE OUTLET (TYPE DENOTED)
	INFORMATION OUTLET (TYPE DENOTED)
	COMBINATION TELEPHONE/DATA OUTLET
WAP	WIRELESS ACCESS POINT
C	CLOCK (TYPE DENOTED)

POWER

SYMBOL	DESCRIPTION
	SINGLE RECEPT.
	DUPLEX RECEPT.
	SPLIT DUPLEX RECEPT.
	ISOLATED GROUND RECEPT (DUPLEX SHOWN)
	RECEPT ON EMERGENCY CKT (DUPLEX SHOWN)
	QUADPLEX RECEPT.
	QUADRAPLEX PLEX RECEPTACLE ON EMERGENCY CIRCUIT
	FLOOR RECEPT. (DUPLEX SHOWN)
J	RECEPT ON DROP CORD (DUPLEX SHOWN)
	RECEPT ON CORD REEL (DUPLEX SHOWN)
	SPECIAL RECEPT. OR CONN. (SEE SCHEDULE)
J	JUNCTION BOX (WALL MOUNTED)
J	JUNCTION BOX (FLOOR MOUNTED)
	HALFTONE SYMBOL INDICATES EXISTING
	DASHED SYMBOL INDICATES REMOVED
	MULTIOUTLET ASSEMBLY (TYPE DENOTED)
P	POWER POLE (OPEN OFFICE STYLE)
	STATIC GROUND RECEPTACLE (TYPE DENOTED)
	LIGHTNING PROTECTION AIR TERMINAL
	GROUND ROD (PLAN VIEW)
P	UTILITY SERVICE POWER POLE (SITE)
	CIRCUIT BREAKER PANEL
	POWER OR DISTRIBUTION PANEL
	TRANSFORMER (TYPE DENOTED)
XX-1	MOTOR (SEE SCHEDULE)
	COMB. MOTOR STARTER (FUSED)
	SAFETY DISC. SW. (NON-FUSED)
	SAFETY DISC. SW. (FUSED)

SECURITY

SYMBOL	DESCRIPTION
CR	CARD READER
DC	DOOR CONTACT
MD	MOTION DETECTOR
	CCTV
	CCTV-PTZ

FIRE ALARM

SYMBOL	DESCRIPTION
	* = FACP (FIRE ALARM CONTROL PANEL) FAA (FIRE ALARM ANNUNCIATOR) FAGM (FIRE ALARM GRAPHIC MAP) PACP (PRE-ACTION CONTROL PANEL)
	* = F (MANUAL PULL STATION) FD (FIRE DAMPER) F/S (FIRE/SMOKE DAMPER) SD (SMOKE DAMPER) M (MAGNETIC DOOR HOLDER) RT (REMOTE TEST STATION & PILOT LIGHT) V (VISUAL) I OR Z (INDIVIDUAL ADDRESSABLE MODULE) WHERE X: C (CONTROL TYPE) M (MONITOR TYPE) S (SUPERVISORY)
	* = F (FLOW SWITCH) T (TAMPER SWITCH) P/V (POST INDICATOR VALVE)
	* = A (AUDIBLE) H (HORN) AV (AUDIBLE & VISUAL) WHERE X: X (CANDELA RATING)
	* = D (DUCT DETECTOR) H (HEAT) S (SMOKE) F (FLAME DETECTOR) IR (INFRA-RED) MF (MULTI SPECTRUM FLAME) S (SMOKE DETECTOR) I (IONIZATION) P (PHOTOELECTRIC) H (HEAT DETECTOR) R (RATE OF RISE) F (FIXED TEMPERATURE)

INSTRUMENTATION

SYMBOL	DESCRIPTION
XX	XX = PS (PRESSURE SWITCH) SV (SOLENOID VALVE) ZS (LIMIT SWITCH) L (FLOAT SWITCH) FS (FLOW SWITCH) FD (FLOOR FLOOD FLOAT SWITCH) T (THERMOSTAT) MV (MOTORIZED VALVE)
XX	XX = PT (PRESSURE TRANSMITTER) LT (LEVEL TRANSMITTER) LE (LEVEL ELEMENT) FT (FLOW TRANSMITTER) FM (FLOW METER ELEMENT) TT (TEMPERATURE TRANSMITTER) AT (ANALYZER) AE (ANALYZER ELEMENT) MV (MODULATING MOTORIZED VALVE)

WIRING AND GROUNDING

SYMBOL	DESCRIPTION
	CONDUIT EXPOSED
	CONDUIT CONCEALED
	CONDUIT CAPPED
	CONDUIT CONTINUED
	GROUND CONDUCTOR
OH	OVERHEAD ELECTRICAL LINE
EE	DIRECT BURIED CONDUIT

SCHEMATIC SYMBOLS LEGEND

SYMBOL	DESCRIPTION
	ANTENNA
	FIELD DEVICE
	DEVICE AT PLC (SCP)
	DEVICE AT MCC (STARTER)
	CONNECTION POINT
	EXTERNAL (FIELD) CONNECTION POINT
	GROUND
CB	CIRCUIT BREAKER
	DRAWOUT CIRCUIT BREAKER
	SWITCH
	FUSE
	NORMALLY OPEN PUSH-BUTTON
	NORMALLY CLOSED PUSH-BUTTON
FOR REV X00 00X	SELECTOR SWITCH
	POTENTIOMETER
	NORMALLY CLOSED CONTACTS
	NORMALLY OPEN CONTACTS
	FIXED CAPACITOR
E-STOP	MUSHROOM HEAD PUSH-BUTTON
	NORMALLY CLOSED LIMIT SWITCH
	NORMALLY OPEN LIMIT SWITCH
	SOLENOID
	FLOAT SWITCH (OPENING ON RISING LEVEL)
	FLOAT SWITCH (CLOSING ON RISING LEVEL)
P	SWITCH (OPENING ON INCREASE) P=PRESSURE, V=VACUUM, DP=DIFFERENTIAL PRESSURE
P	SWITCH (CLOSING ON INCREASE) P=PRESSURE, V=VACUUM, DP=DIFFERENTIAL PRESSURE
	TEMPERATURE SWITCH (OPENING ON RISING LEVEL)
	TEMPERATURE SWITCH (CLOSING ON RISING LEVEL)
TD1 SET @ 60 SEC	ON TIME DELAY SWITCH (TIME DELAY AFTER COIL IS ENERGIZED)
	OFF TIME DELAY SWITCH (TIME DELAY BEFORE COIL IS ENERGIZED)
	FLOW SWITCH (OPENING ON INCREASE IN FLOW)
	FLOW SWITCH (CLOSING ON INCREASE IN FLOW)
	TORQUE SWITCH (NORMALLY CLOSED)
	TORQUE SWITCH (NORMALLY OPEN)
	ENGINE DRIVEN GENERATOR
15	MOTOR- NUMBER DENOTES HORSEPOWER
	CURRENT TRANSFORMER
	POTENTIAL TRANSFORMER
M	METERING DEVICE
	FUSED DISCONNECT
O/L	MAGNETIC STARTER
O/L	THERMAL OVERLOAD RELAY
	SURGE SUPPRESSION
480V 120V	TRANSFORMER
	ALARM HORN
K	KEY INTERLOCK
A	PILOT LIGHT
CR	STARTER, CONTACTOR OR RELAY COIL

ELECTRICAL SYMBOL NOTES

A2 b, 12 — FIXTURE TYPE; SWITCH DESIGNATION; CIRCUIT NUMBER

E, 14 — FIXTURE TYPE; CHEVRON DIRECTION; SHADE = EXIT FACE; CIRCUIT NUMBER

16 — CIRCUIT NUMBER

d — SWITCH IDENTIFICATION

PANELBOARD IDENTIFICATION

EQUIPMENT DESIGNATION	CODE
3Ø4W, 480Y/277V	PP
3Ø3W. 480	P
3Ø4W. 208Y/120V	LP
1Ø3W. 240/120V	L

SYSTEMS DESIGNATION	CODE
NORMAL	(BLANK)
EMERGENCY	E
UNINTERRUPTIBLE POWER SOURCE	U

LPE-102: SYSTEM DESIGNATION; EQUIPMENT DESIGNATION; FLOOR OF STRUCTURE; PANEL NUMBER

ELECTRICAL ABBREVIATIONS LIST

1P	1 POLE (2P, 3P, 4P, ETC.)
A	AMPERE
AC	ABOVE COUNTER OR AIR CONDITIONER
ACLG	ABOVE CEILING
ADO	AUTOMATIC DOOR OPENER
AF	AMP FRAME
AFF	ABOVE FINISHED FLOOR
AFG	ABOVE FINISHED GRADE
AFI	ARC FAULT CIRCUIT INTERRUPTER
AHU	AIR HANDLING UNIT
AL	ALUMINUM
ALT	ALTERNATE
AMP	AMPERE
AMPL	AMPLIFIER
ANNUN	ANNUNCIATOR
APPROX	APPROXIMATELY
AQ-STAT	AQUASTAT
ARCH	ARCHITECT, ARCHITECTURAL
AS	AMP SWITCH
AT	AMP TRIP
ATS	AUTOMATIC TRANSFER SWITCH
AUTO	AUTOMATIC
AUX	AUXILIARY
AV	AUDIO VISUAL
AWG	AMERICAN WIRE GAUGE
BATT	BATTERY
BD	BOARD
BLDG	BUILDING
BMS	BUILDING MANAGEMENT SYSTEM
C	CONDUIT
CAB	CABINET
CAT	CATALOG
CATV	CABLE TELEVISION
CB	CIRCUIT BREAKER
CCTV	CLOSED CIRCUIT TELEVISION
CKT	CIRCUIT
CLG	CEILING
COMB	COMBINATION
CMPR	COMPRESSOR
CONN	CONNECTION
CONST	CONSTRUCTION
CONT	CONTINUATION OR CONTINUOUS
CONTR	CONTRACTOR
CONV	CONVECTOR
CP	CIRCULATING PUMP
CRT	CATHODE-RAY TUBE
CT	CURRENT TRANSFORMER
CTR	CENTER
CU	COPPER
DCP	DOMESTIC WATER CIRCULATING PUMP
DEPT	DEPARTMENT
DET	DETAIL
DIA	DIAMETER
DISC	DISCONNECT
DIST	DISTRIBUTION
DN	DOWN
DPR	DAMPER
DS	SAFETY DISCONNECT SWITCH
DT	DOUBLE THROW
DWG	DRAWING
EC	ELECTRICAL CONTRACTOR
ELEC	ELECTRIC, ELECTRICAL
ELEV	ELEVATOR
EM	EMERGENCY
EMS	ENERGY MANAGEMENT SYSTEM
EMT	ELECTRICAL METALLIC TUBING
EP	ELECTRIC PNEUMATIC
EQUIP	EQUIPMENT
EWC	ELECTRIC WATER COOLER
EXIST	EXISTING
EXH	EXHAUST
EXP	EXPLOSION PROOF
FA	FIRE ALARM
FABP	FIRE ALARM BOOSTER POWER SUPPLY PANEL
FACP	FIRE ALARM CONTROL PANEL
FCU	FAN COIL UNIT
FIXT	FIXTURE
FLR	FLOOR
FLUOR	FLUORESCENT
FU	FUSE
FUDS	FUSED SAFETY DISCONNECT SWITCH
GA	GAUGE
GAL	GALLON
GALV	GALVANIZED
GC	GENERAL CONTRACTOR
GEN	GENERATOR
GFI	GROUND FAULT CIRCUIT INTERRUPTER
GFP	GROUND FAULT PROTECTOR
GND	GROUND
GRS	GALVANIZED RIGID STEEL (CONDUIT)
GYP BD	GYPSUM BOARD
HOA	HANDS-OFF-AUTOMATIC SWITCH
HORIZ	HORIZONTAL
HP	HORSEPOWER
HPF	HIGH POWER FACTOR
HT	HEIGHT
HTG	HEATING
HTR	HEATER
HV	HIGH VOLTAGE
HVAC	HEATING, VENTILATING AND AIR CONDITIONING
HWP	HYDRONIC WATER PUMP
IC	INTERRUPTING CAPACITY
IG	ISOLATED GROUND
IMC	INTERMEDIATE METAL CONDUIT
INCAND	INCANDESCENT
IR	INFRARED
I/W	INTERLOCK WITH
J-BOX	JUNCTION BOX
KV	KILOVOLT
KVA	KILOVOLT-AMPERE
KVAR	KILOVOLT-AMPERE REACTIVE
KW	KILOWATT
KWH	KILOWATT HOUR
LOC	LOCATE OR LOCATION
LT	LIGHT
LTG	LIGHTING
LTNG	LIGHTNING
LV	LOW VOLTAGE
MAX	MAXIMUM
MAG.S	MAGNETIC STARTER
M/C	MOMENTARY CONTACT
MC	MECHANICAL CONTRACTOR
MCB	MAIN CIRCUIT BREAKER
MCC	MOTOR CONTROL CENTER
MDC	MAIN DISTRIBUTION CENTER
MDP	MAIN DISTRIBUTION PANEL
MFR	MANUFACTURER
MFS	MAIN FUSED DISCONNECT SWITCH
MH	MANHOLE
MIC	MICROPHONE
MIN	MINIMUM
MISC	MISCELLANEOUS
MLO	MAIN LUGS ONLY
MMS	MANUAL MOTOR STARTER
MOA	MULTIOUTLET ASSEMBLY
MSP	MOTOR STARTER PANELBOARD
MSBD	MAIN SWITCHBOARD
MT	MOUNT
MT.C	EMPTY CONDUIT
MTS	MANUAL TRANSFER SWITCH
MTR	MOTOR, MOTORIZED
N.C.	NORMALLY CLOSED
NEC	NATIONAL ELECTRICAL CODE
NEMA	NATIONAL ELECTRICAL MANUFACTURER'S ASSOCIATION
NFDS	NON-FUSED SAFETY DISCONNECT SWITCH
NIC	NOT IN CONTRACT
NL	NIGHT LIGHT
N.O.	NORMALLY OPEN
NPF	NORMAL POWER FACTOR
NTS	NOT TO SCALE
OH	OVERHEAD
OL	OVERLOADS
PA	PUBLIC ADDRESS
PB	PULL BOX OR PUSHBUTTON
PE	PNEUMATIC ELECTRIC
PED	PEDESTAL
PF	POWER FACTOR
PH	PHASE
PIV	POST INDICATING VALVE
PNL	PANEL
PP	POWER POLE
PR	PAIR
PRI	PRIMARY
PROJ	PROJECTION
PRV	POWER ROOF VENTILATOR
PT	POTENTIAL TRANSFORMER
PVC	POLYVINYL CHLORIDE (CONDUIT)
PWR	POWER
QUAN	QUANTITY
RCPT	RECEPTACLE
REQD	REQUIRED
RM	ROOM
RSC	RIGID STEEL CONDUIT
RTU	ROOF TOP UNIT
SC	SURFACE CONDUIT
SEC	SECONDARY
SHT	SHEET
SIM	SIMILAR
S/N	SOLID NEUTRAL
SPEC	SPECIFICATION
SPKR	SPEAKER
SP	SPARE
SR	SURFACE RACEWAY
SS	STAINLESS STEEL
SSW	SELECTOR SWITCH
S/S	STOP/START PUSHBUTTONS
STA	STATION
STD	STANDARD
SURF	SURFACE MOUNTED
SW	SWITCH
SWBD	SWITCHBOARD
SYM	SYMMETRICAL
SYS	SYSTEM
TEL	TELEPHONE
TEL/DATA	TELEPHONE/DATA
TERM	TERMINAL
TL	TWIST LOCK
TR	TAMPER RESISTANT
T-STAT	THERMOSTAT
TTC	TELEPHONE TERMINAL CABINET
TV	TELEVISION
TVTC	TELEVISION TERMINAL CABINET
TYP	TYPICAL
UC	UNDER COUNTER
UE	UNDERGROUND ELECTRICAL
UG	UNDERGROUND
UH	UNIT HEATER
UT	UNDERGROUND TELEPHONE
UTIL	UTILITY
UV	UNIT VENTILATOR OR ULTRAVIOLET
V	VOLT
VA	VOLT-AMPERES
VDT	VIDEO DISPLAY TERMINAL
VERT	VERTICAL
VFD	VARIABLE FREQUENCY DRIVE
VOL	VOLUME
W	WATT
W/	WITH
WG	WIRE GUARD
WH	WATER HEATER
W/O	WITHOUT
WP	WEATHERPROOF
XFMR	TRANSFORMER
XFR	TRANSFER
∠	ANGLE
@	AT
▲	DELTA
'	FEET
"	INCHES
#	NUMBER
Ø	PHASE
C	CENTER LINE
P	PLATE

DPW
FORT MCCOY, WI

MARK	MOD REQUEST # - DESCRIPTION	DATE	MOD #
#	#		
#	#		
#	#		
#	#		
#	#		
#	#		
#	#		

SEH – TEPA ES JV, LLC
PHONE: 920.380.2830
329 JAY ST, SUITE 301
LA CROSSE, WI 54601

FORT McCOY
REPAIR SOUTH POST
RESERVOIRS
FORT McCOY, WISCONSIN

FORT McCOY
DIRECTORATE OF PUBLIC WORKS
2171 SOUTH 8TH AVE.
FORT MC COY, WI 54656

ELECTRICAL
SYMBOLS ABBREVIATIONS
AND NOTES

Designed by: JAM		Date: 3/5/2026	
Dwn by: JLR	Ckd by: JPC	Rev.	
Reviewed by:		Work Order No 1612	
Submitted by: DPW		Project Number 1503	

SHEET NUMBER:
E0.1

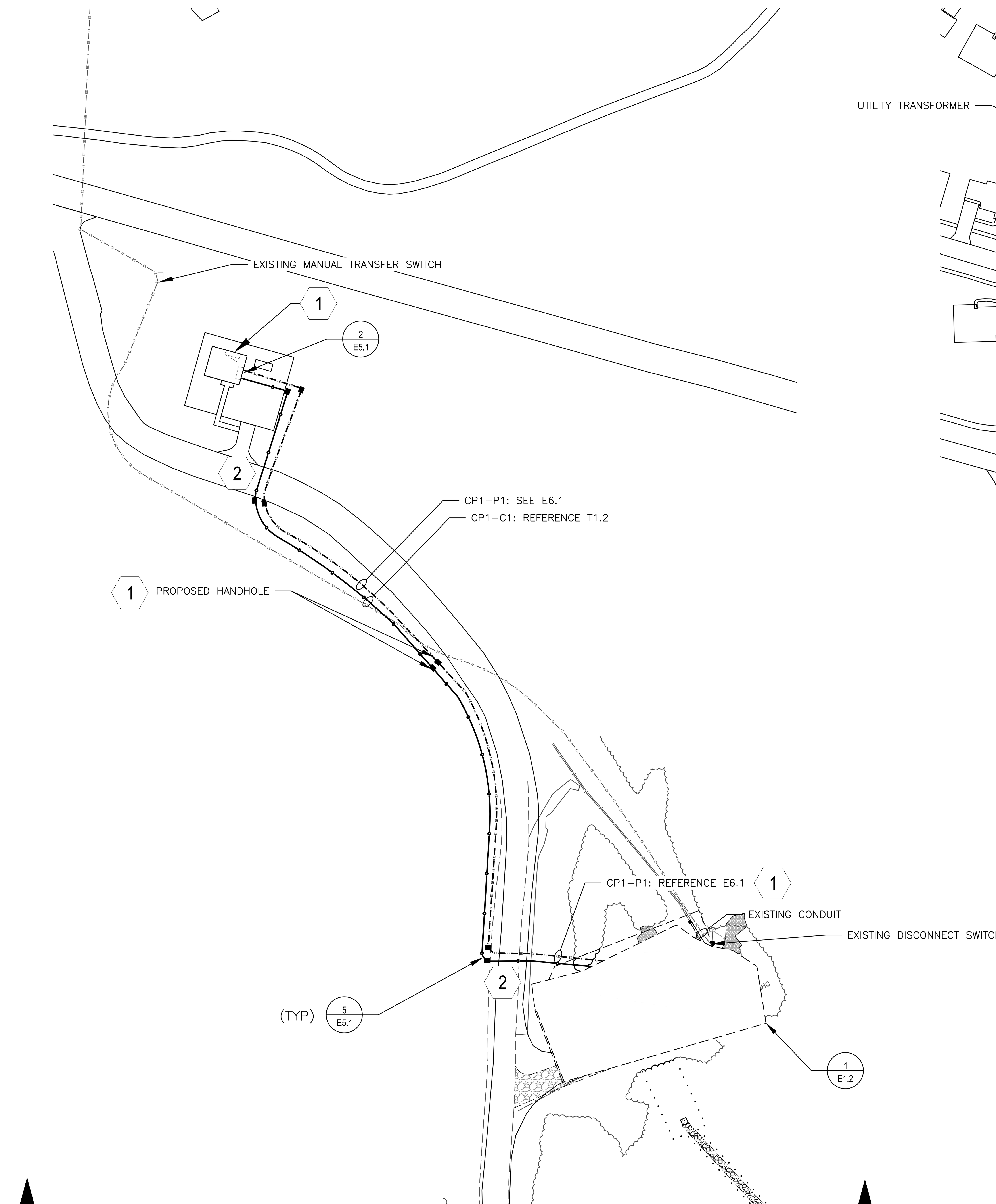

1 E1.1 ELECTRICAL - OVERALL SITE PLAN

SCALE: 1"=60'

0 60 120 SCALE IN FEET

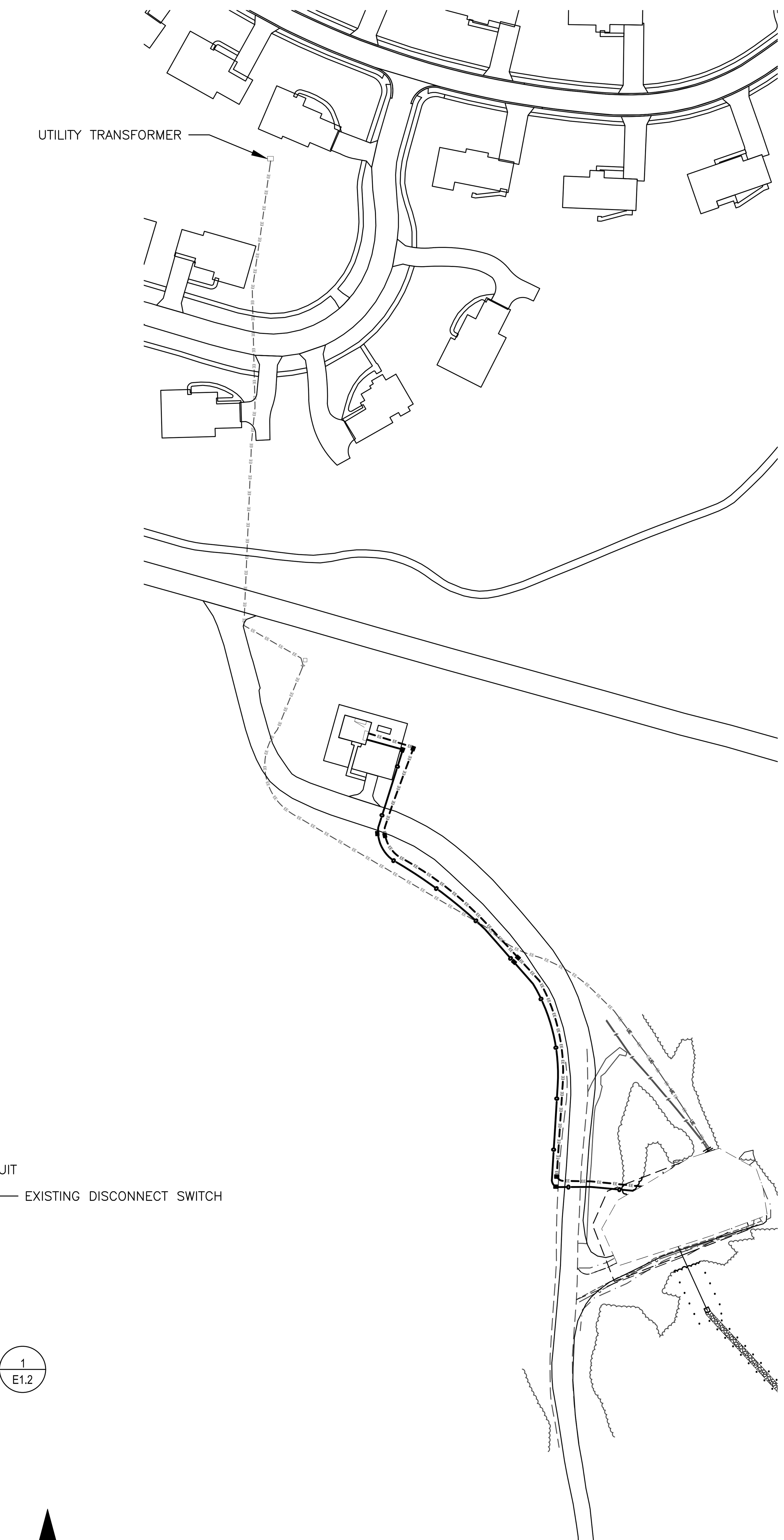

2 E1.1 ELECTRICAL - OVERALL SITE PLAN

SCALE: 1"=100'

0 100 200 SCALE IN FEET

GENERAL NOTES:

A. ALL CONDUIT SHOWN IS APPROXIMATE. COORDINATE WITH ALL OTHER TRADES AND UTILITIES TO AVOID CONFLICTS WITH NEW WORK AND EXISTING CONDITIONS PRIOR TO INSTALLATION.

B. REFERENCE ONE LINE DIAGRAMS ON SHEET E6.1 FOR CONDUIT AND CONDUCTOR REQUIREMENTS.

C. REFERENCE DETAIL ON SHEET E5.1 FOR HANDHOLE INSTALLATION DETAILS.

D. REFERENCE DETAIL ON SHEET E5.1 FOR DIRECT BURIED CONDUIT DETAILS.

E. REFERENCE DETAIL ON SHEET E5.1 FOR BUILDING CONDUIT ENTRY.

F. REFERENCE SHEET E1.2 FOR DEMOLITION AT THE RESERVOIRS.

KEYNOTES:

1. PROVIDE NEW CONDUIT AND CONDUCTORS FROM NEW RESERVOIR CONTROL PANEL, CP–1, TO 120/208V PANELBOARD 5031 IN WELL HOUSE BUILDING. REMOVE TWO SPARE 20A/1P BREAKERS IN SPACES 21 AND 23 AND PROVIDE ONE 60A/2P BREAKER IN THE SAME SPACES.

2. DIRECTIONAL BORE UNDER ROADWAYS.

DPW FORT McCOY, WI

MARK	MOD REQUEST # - DESCRIPTION	DATE	MOD #

SEH – TEPA ES JV, LLC
PHONE: 920.380.2830
329 JAY ST, SUITE 301
LA CROSSE, WI 54601

FORT McCOY
REPAIR SOUTH POST RESERVOIRS
FORT McCOY, WISCONSIN

Designed by: JAM | Date: 3/5/2026
Dwn by: JLR | Ckd by: JPC | Rev.
Reviewed by: | Work Order No 1612
Submitted by: DPW | Project Number 1503

FORT McCOY
DIRECTORATE OF PUBLIC WORKS
2171 SOUTH 8TH AVE.
FORT MC COY, WI 54656

ELECTRICAL
OVERALL SITE PLAN
PHASE 1

SHEET NUMBER:

E1.1

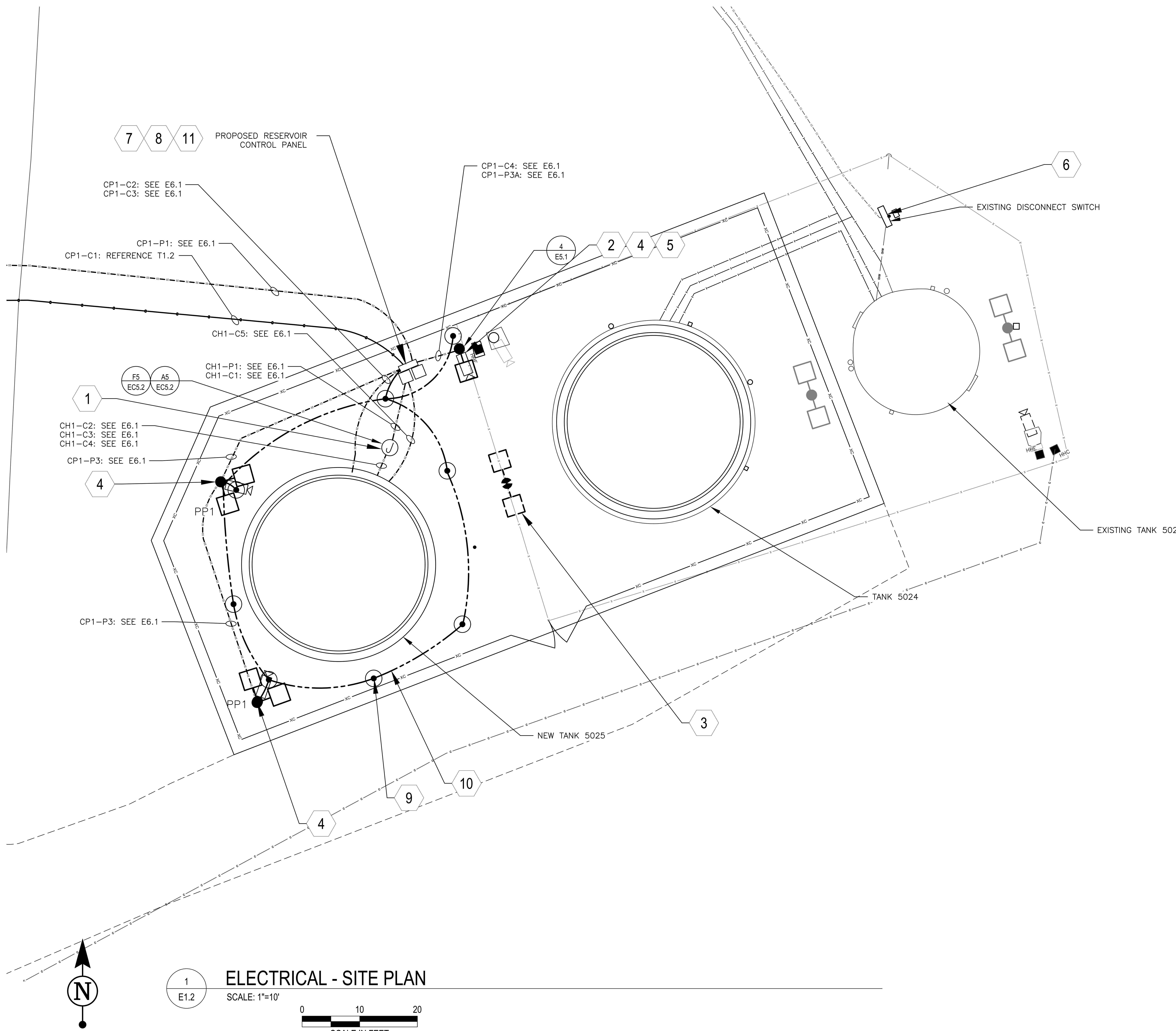

ELECTRICAL - SITE PLAN

1 / E1.2

SCALE: 1"=10'

0 10 20 SCALE IN FEET

GENERAL NOTES:

A. CONDUIT ROUTING IS SHOWN DIAGRAMMATICALLY FOR CLARITY. ROUTE ALL CONDUITS WITHIN THE SAME TRENCH AND WITHIN THE FENCELINE UNLESS NOTED OTHERWISE.

B. ALL CONDUIT SHOWN IS APPROXIMATE. COORDINATE WITH ALL OTHER TRADES AND UTILITIES TO AVOID CONFLICTS WITH NEW WORK AND EXISTING CONDITIONS PRIOR TO INSTALLATION.

C. REFERENCE ONE LINE DIAGRAMS ON SHEET E6.1 FOR CONDUIT AND CONDUCTOR REQUIREMENTS.

D. REFERENCE DETAIL ON SHEET E5.1 FOR HANDHOLE INSTALLATION DETAILS.

E. REFERENCE DETAIL ON SHEET E5.1 FOR DIRECT BURIED CONDUIT DETAILS.

KEYNOTES:

1. PROVIDE CATHODIC PROTECTION EQUIPMENT ON NEW TANK. REFER TO DETAIL A5/EC5.2 & F5/EC5.2.
2. PROVIDE NEW ANTENNA WITH CABLE AND MOUNT ON POLE. REFERENCE DETAILS 4 & 6/E5.1.
3. DISCONNECT AND DEMOLISH LIGHT FIXTURE. DEMOLISH CONDUIT AND CONDUCTORS BACK TO SOURCE. REMOVE LIGHTNING PROTECTION FROM POLE AND DEMOLISH BACK TO NEAREST GROUND ROD.
4. PROVIDE NEW POLE AND LIGHT FIXTURES 5 FEET MINIMUM FROM FENCELINE. REFERENCE DETAILS 3 & 6/E5.1.
5. PROVIDE NEW POLE AND OMNI-DIRECTIONAL ANTENNA.
6. SALVAGE EXISTING RADIO FROM CONTROL PANEL. INSTALL RADIO IN NEW CONTROL PANEL. RADIO SERVES AS A REPEATER FOR MULTIPLE SITES AND DOWNTIME MUST BE LIMITED. COORDINATE WITH COR AND GOVERNMENT ON OUTAGE SCHEDULE AND DURATION.
7. INSTALL SALVAGED RADIO IN NEW CONTROL PANEL AND CONNECT TO NEW OMNI-DIRECTIONAL ANTENNA AND TEST PROPER FUNCTIONALITY/CONNECTIVITY WITH ALL REMOTE SITES PREVIOUSLY CONNECTED.
8. MOUNT CATHODIC PROTECTION RECTIFIERS ON BACKSIDE OF CONTROL PANEL RACKING.
9. 10 FT BY 3/4" DIAMETER GROUND ROD. (TYP).
10. #1/0 AWG BRAIDED COPPER CABLE. BURIED 18" MINIMUM. (TYP).
11. NEW CONTROL PANEL CP-1. SEE 7/E5.1 FOR MOUNTING DETAILS. SEE SECTION 40 90 05 AND E6.1 FOR ADDITIONAL DETAILS.

DPW
FORT McCOY, WI

MARK	DATE	MOD REQUEST # - DESCRIPTION	MOD #

SEH – TEPA ES JV, LLC
PHONE: 920.380.2830
329 JAY ST, SUITE 301
LA CROSSE, WI 54601

FORT McCOY
REPAIR SOUTH POST
RESERVOIRS
FORT McCOY, WISCONSIN

FORT McCOY
DIRECTORATE OF PUBLIC WORKS
2171 SOUTH 8TH AVE.
FORT MC COY, WI 54656

Designed by: JAM		Date: 3/5/2026
Dwn by: JLR	Ckd by: JPC	Rev.
Reviewed by:		Work Order No 1612
Submitted by: DPW		Project Number 1503

ELECTRICAL
SITE PLAN
PHASE 1

SHEET NUMBER:
E1.2

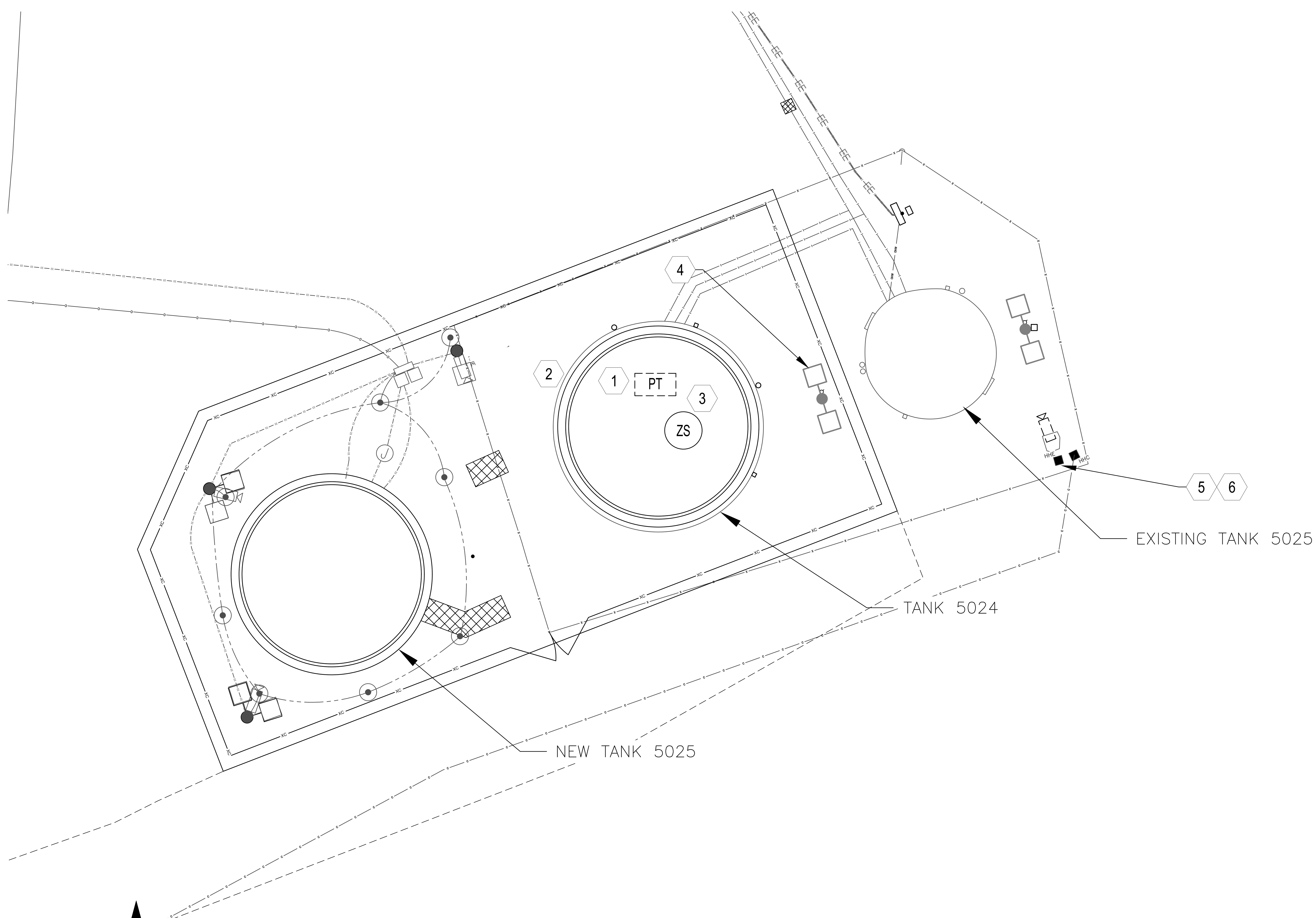

N

1
E1.3

ELECTRICAL - DEMOLITION SITE PLAN

SCALE: 1"=10'

0 10 20
SCALE IN FEET

GENERAL NOTES:

A. COORDINATE ALL REMOVAL WORK WITH ALL OTHER CONTRACTORS.

B. FIELD VERIFY ALL ELECTRICAL EQUIPMENT LOCATIONS PRIOR TO REMOVAL AND IDENTIFY ANY ISSUES NOT SHOWN ON PLANS.

KEYNOTES:

1. DISCONNECT AND DEMOLISH TANK LEVEL TRANSDUCER. REMOVE CONDUIT AND CONDUCTORS TO SOURCE.
2. DISCONNECT AND DEMOLISH CATHODIC PROTECTION CIRCUITRY.
3. DISCONNECT AND DEMOLISH ROOF HATCH POSITION SWITCH. REMOVE CONDUIT AND WIRE BACK TO SOURCE.
4. DISCONNECT AND DEMOLISH LIGHT FIXTURES AND POLE. DEMOLISH CONDUIT AND CONDUCTORS BACK TO SOURCE. REMOVE LIGHTNING PROTECTION FROM POLE AND DEMOLISH BACK TO NEAREST GROUND ROD.
5. DES TO DISCONNECT POWER CONDUCTORS FROM CAMERA PANEL.
6. DEMOLISH POWER HANDHOLE AND ASSOCIATED CONDUIT AND CONDUCTORS TO SOURCE.

DPW
FORT MCCOY, WI

MARK	MOD REQUEST # - DESCRIPTION	DATE	MOD #

SEH – TEPA ES JV, LLC
PHONE: 920.380.2830
329 JAY ST, SUITE 301
LA CROSSE, WI 54601

FORT McCOY
REPAIR SOUTH POST RESERVOIRS
FORT McCOY, WISCONSIN

Designed by: JAM	Date: 3/5/2026		
Dwn by: JLR	Ckd by: JPC	Rev.	
Reviewed by: VALUE		Work Order No 1612	
Submitted by: DPW		Project Number 1503	

FORT McCOY
DIRECTORATE OF PUBLIC WORKS
2171 SOUTH 8TH AVE.
FORT MC COY, WI 54656

ELECTRICAL
DEMOLITION SITE PLAN
PHASE 2A

SHEET NUMBER:
E1.3

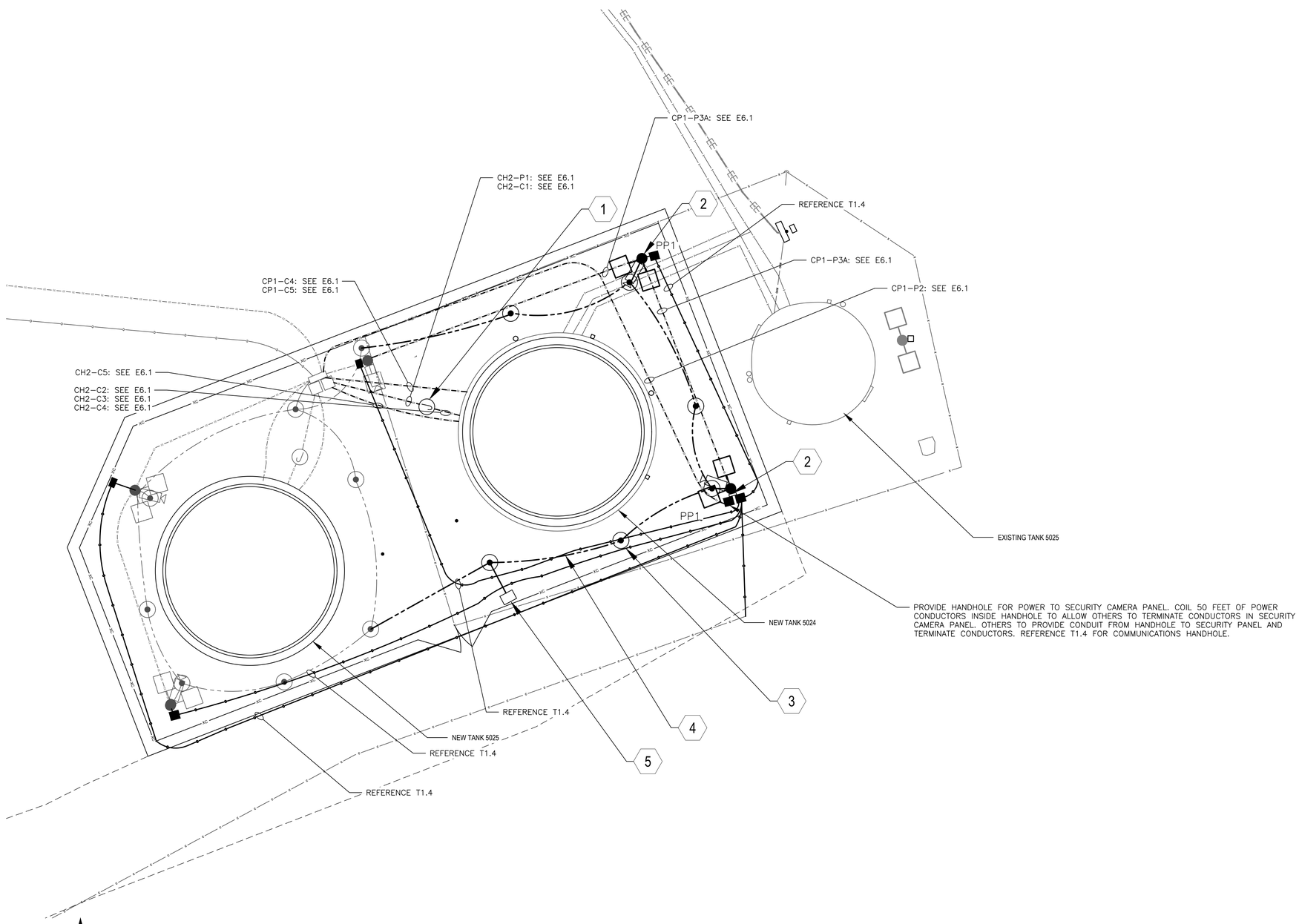

1 E1.4

ELECTRICAL - SITE PLAN

SCALE: 1"=10'

0 10 20

SCALE IN FEET

GENERAL NOTES:

A. CONDUIT ROUTING IS SHOWN DIAGRAMMATICALLY FOR CLARITY. ROUTE ALL CONDUITS WITHIN THE SAME TRENCH AND WITHIN THE FENCELINE UNLESS NOTED OTHERWISE.

B. ALL CONDUIT SHOWN IS APPROXIMATE. COORDINATE WITH ALL OTHER TRADES AND UTILITIES TO AVOID CONFLICTS WITH NEW WORK AND EXISTING CONDITIONS PRIOR TO INSTALLATION.

C. REFERENCE ONE LINE DIAGRAMS ON SHEET E6.1 FOR CONDUIT AND CONDUCTOR REQUIREMENTS.

D. REFERENCE DETAIL ON SHEET E5.1 FOR HANDHOLE INSTALLATION DETAILS.

E. REFERENCE DETAIL ON SHEET E5.1 FOR DIRECT BURIED CONDUIT DETAILS.

KEYNOTES:

1. PROVIDE CATHODIC PROTECTION EQUIPMENT IN NEW TANK. REFER TO DETAIL A5/EC5.2 & F5/EC5.2.
2. PROVIDE NEW LIGHT FIXTURES AND POLE WITH LIGHTNING ELECTRODE. EXTEND NEW LIGHTING CIRCUIT TO FIXTURES. EXTEND NEW POLE TO GROUND GRID LIGHTNING PROTECTION.
3. 10 FT BY 3/4" DIAMETER GROUND ROD. (TYP).
4. #1/0 AWG BRAIDED COPPER CABLE. BURIED 18" MINIMUM. (TYP).
5. 10" DIAMETER BY 24" LENGTH, PVC GROUND TEST WELL.

DPW
FORT MCCOY, WI

MARK	MOD REQUEST # - DESCRIPTION	DATE	MOD #
A			
A			
A			
A			
A			
A			
A			

SEH – TEPA ES JV, LLC
PHONE: 920.380.2830
329 JAY ST, SUITE 301
LA CROSSE, WI 54601

FORT McCOY
REPAIR SOUTH POST
RESERVOIRS
FORT McCOY, WISCONSIN

Designed by: JAM	Date: 3/5/2026
Dwn by: JLR	Ckd by: JPC
Reviewed by:	Rev:
Submitted by: DPW	Work Order No 1612
	Project Number 1503

FORT McCOY
DIRECTORATE OF PUBLIC WORKS
2171 SOUTHEAST AVE
FORT MC COY, WI 54656

ELECTRICAL
SITE PLAN
PHASE 2B

SHEET NUMBER:

E1.4

GENERAL NOTES:

A. COORDINATE ALL REMOVAL WORK WITH ALL OTHER CONTRACTORS.

B. FIELD VERIFY ALL ELECTRICAL EQUIPMENT LOCATIONS PRIOR TO REMOVAL AND IDENTIFY ANY ISSUES NOT SHOWN ON PLANS.

KEYNOTES:

1. DISCONNECT AND DEMOLISH TANK LEVEL TRANSDUCER. REMOVE CONDUIT AND CONDUCTORS TO SOURCE.
2. DISCONNECT AND DEMOLISH ROOF HATCH POSITION SWITCH. REMOVE CONDUIT AND CONDUCTORS BACK TO SOURCE.
3. DISCONNECT AND DEMOLISH TANK CATHODIC PROTECTION. DEMOLISH ASSOCIATED CONDUIT AND CONDUCTORS TO SOURCE.
4. DISCONNECT AND DEMOLISH ALL ELECTRICAL EQUIPMENT, MOUNTING BRACKETS, AND WOOD POLE. DEMOLISH ALL ASSOCIATED CONDUIT AND CONDUCTORS TO SOURCE. REFERENCE SHEET E1.1 FOR DEMOLITION OF MANUAL TRANSFER SWITCH AT BOTTOM OF HILL.
5. DISCONNECT AND DEMOLISH LIGHT FIXTURE. DEMOLISH CONDUIT AND CONDUCTORS BACK TO SOURCE. DEMOLISH LIGHTNING PROTECTION FROM POLE AND DEMOLISH BACK TO NEAREST GROUND ROD.

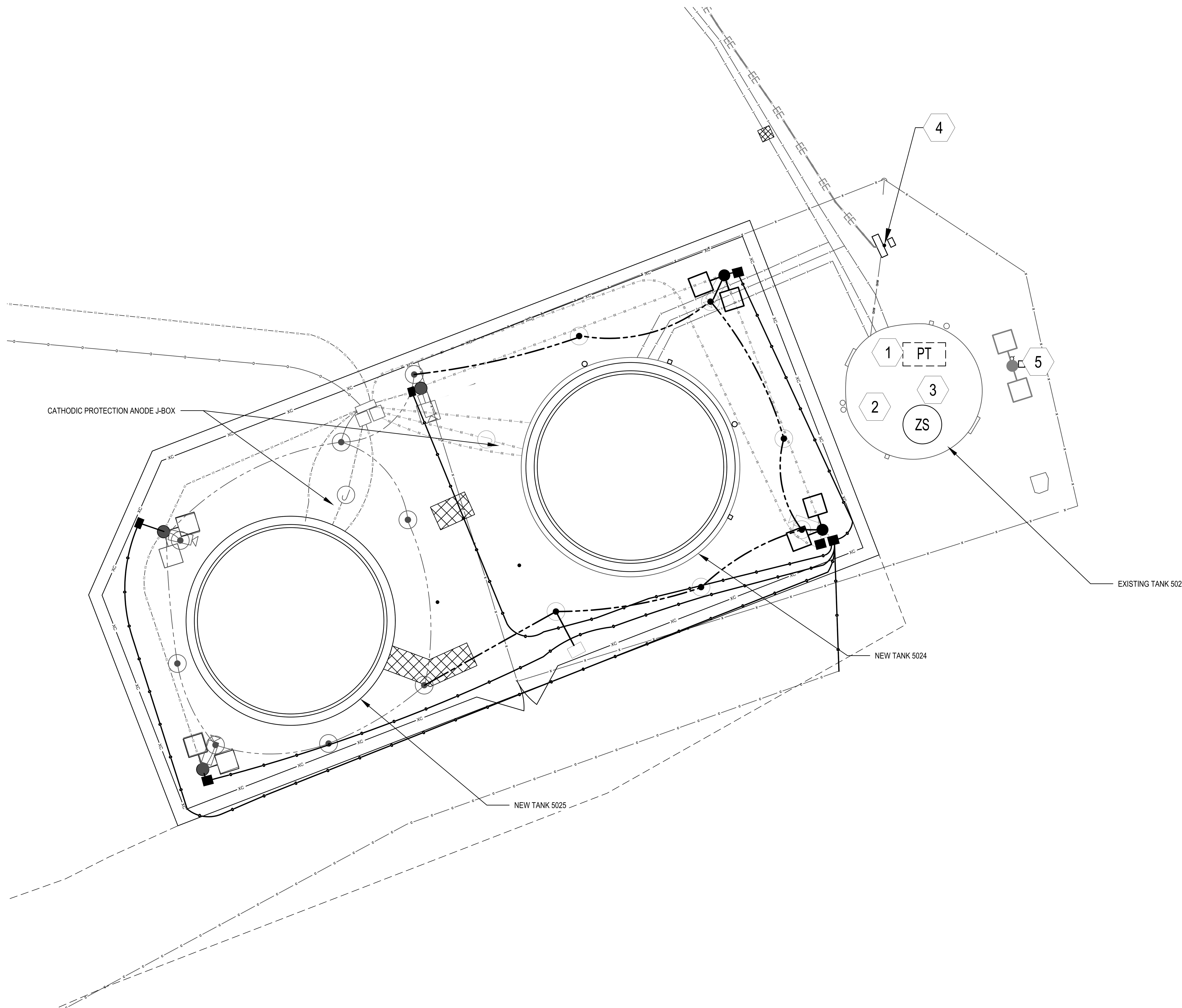

1 E1.5

ELECTRICAL - DEMOLITION SITE PLAN

SCALE: 1"=10'

0 10 20
SCALE IN FEET

DPW
FORT McCOY, WI

MARK	MOD REQUEST # - DESCRIPTION	DATE	MOD #

SEH – TEPA ES JV, LLC
PHONE: 920.380.2830
329 JAY ST, SUITE 301
LA CROSSE, WI 54601

FORT McCOY
REPAIR SOUTH POST
RESERVOIRS
FORT McCOY, WISCONSIN

Date: 3/5/2026
Rev.
Work Order No 1612
Project Number 1503
Designed by: JAM
Dwn by: JLR
Ckd by: JPC
Reviewed by:
Submitted by: DPW

FORT McCOY
DIRECTORATE OF PUBLIC WORKS
2171 SOUTH 8TH AVE.
FORT MC COY, WI 54656

ELECTRICAL
DEMOLITION SITE PLAN
PHASE 3

SHEET NUMBER:
E1.5
SHEET 31 of 46

GENERAL NOTES:

A. ALL CONDUIT SHOWN IS APPROXIMATE. COORDINATE WITH ALL OTHER TRADES AND UTILITIES TO AVOID CONFLICTS WITH NEW WORK AND EXISTING CONDITIONS PRIOR TO INSTALLATION.

B. REFERENCE SHEET E1.5 FOR DEMOLITION AT THE RESERVOIRS.

KEYNOTES: ⬡

1. DEMOLISH CONDUIT AND CONDUCTORS FROM RESERVOIR DISCONNECT SWITCH TO MANUAL TRANSFER SWITCH. DEMOLISH MANUAL TRANSFER SWITCH AND CONDUIT AND CONDUCTORS FROM MANUAL TRANSFER SWITCH TO TRANSFORMER SECONDARY. COORDINATE WITH XCEL ENERGY.

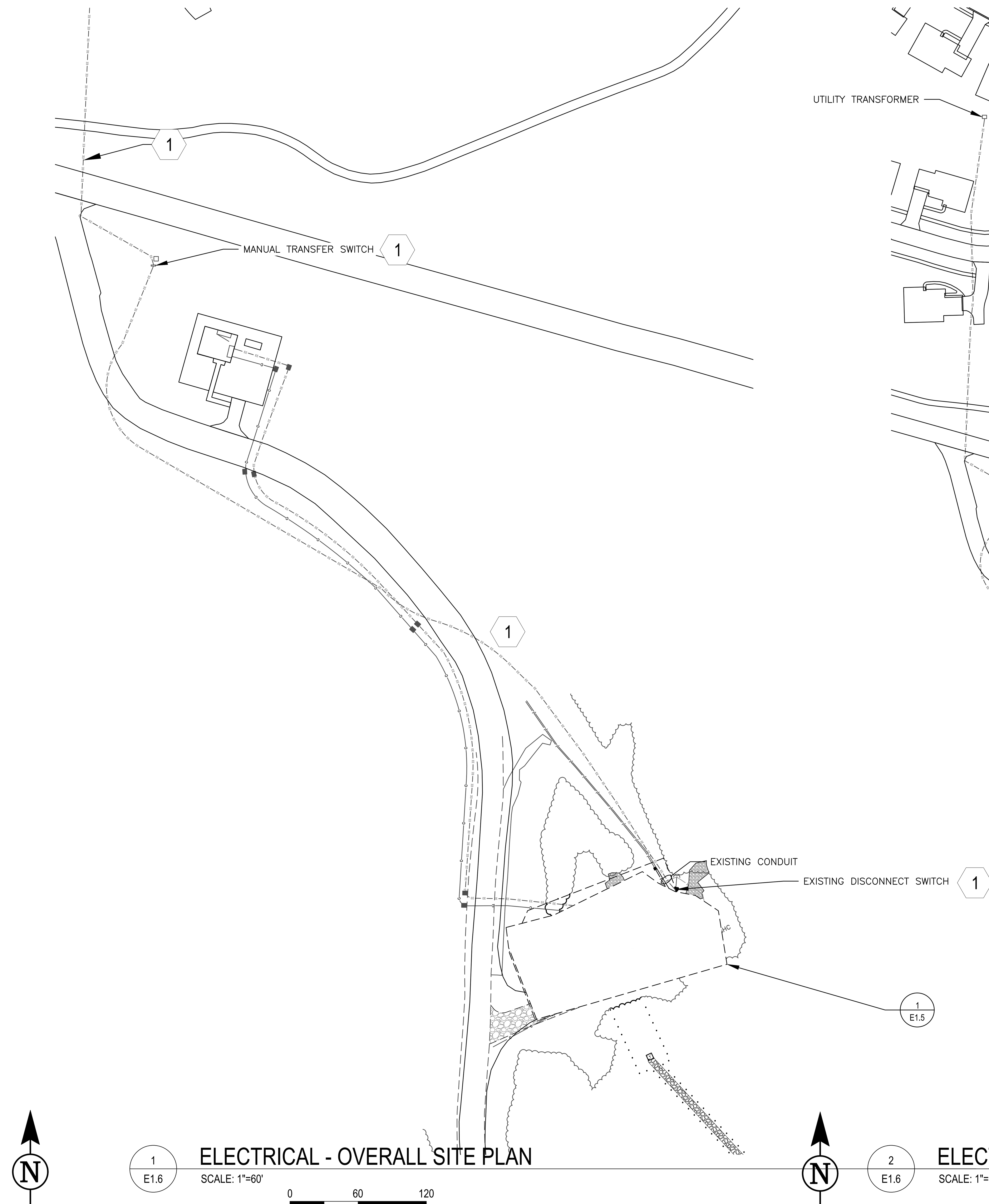

1 / E1.6 ELECTRICAL - OVERALL SITE PLAN

SCALE: 1"=60'

0 60 120 SCALE IN FEET

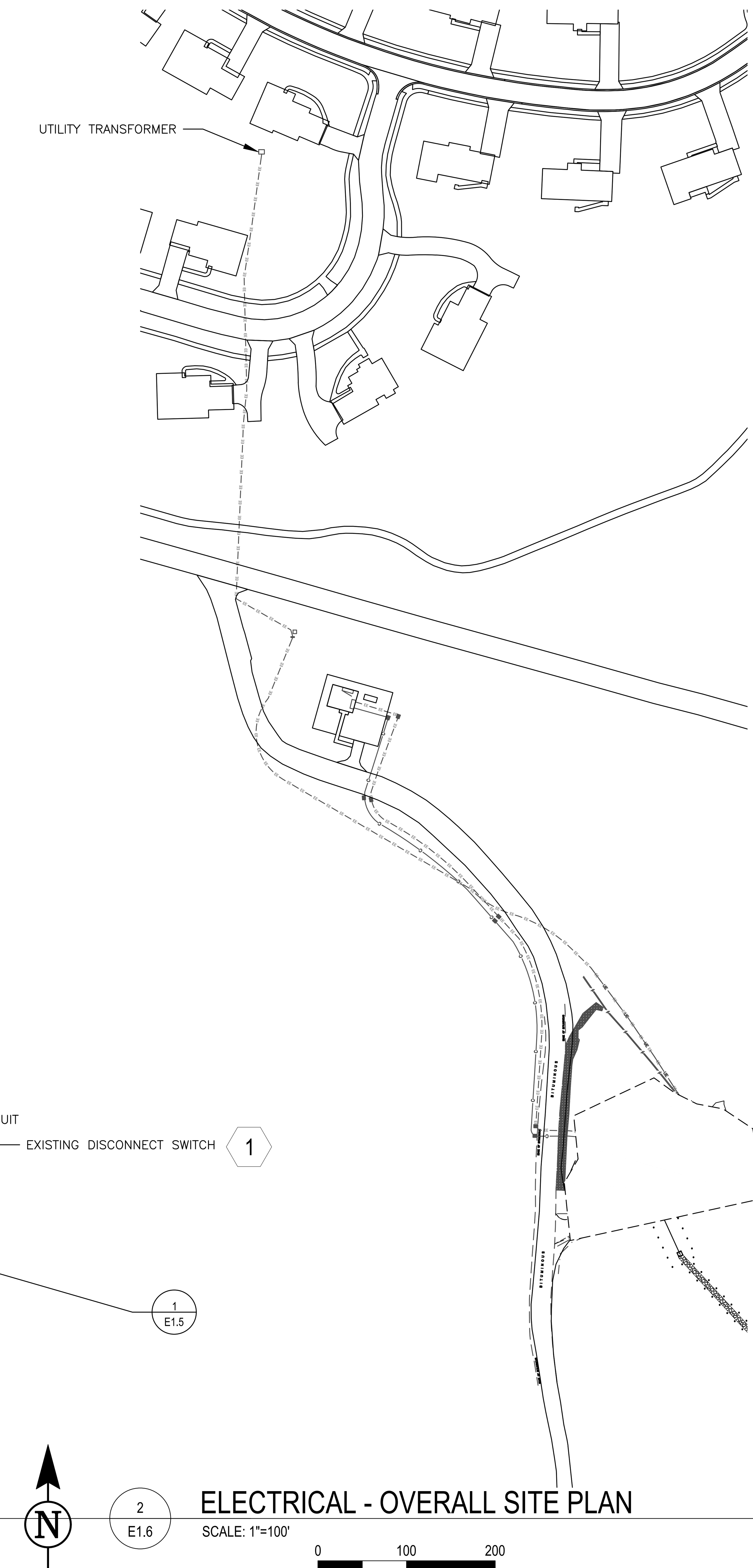

2 / E1.6 ELECTRICAL - OVERALL SITE PLAN

SCALE: 1"=100'

0 100 200 SCALE IN FEET

DPW FORT McCOY, WI

MARK	MOD REQUEST # - DESCRIPTION	DATE	MOD #

SEH – TEPA ES JV, LLC
PHONE: 920.380.2830
329 JAY ST, SUITE 301
LA CROSSE, WI 54601

FORT McCOY
REPAIR SOUTH POST
RESERVOIRS
FORT McCOY, WISCONSIN

Designed by: JAM	Date: 3/5/2026		
Dwn by: JLR	Ckd by: JPC	Rev.	
Reviewed by:		Work Order No 1612	
Submitted by: DPW		Project Number 1503	

FORT McCOY
DIRECTORATE OF PUBLIC WORKS
2171 SOUTH 8TH AVE.
FORT MC COY, WI 54656

ELECTRICAL OVERALL
SITE DEMOLITION PLAN
PHASE 3

SHEET NUMBER:
E1.6

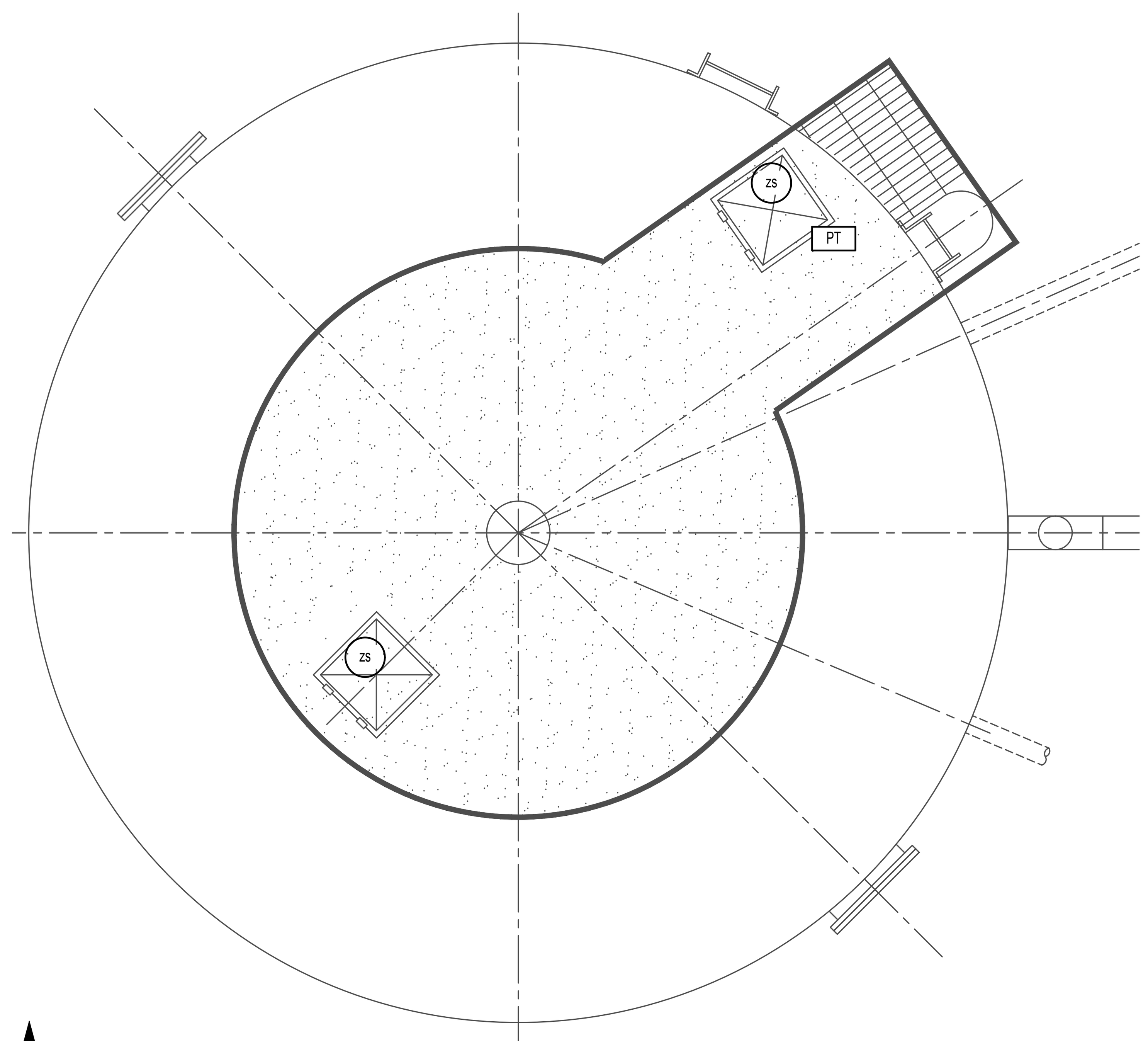

1
E1.7
ELECTRICAL - NEW TANK 5025 FLOOR PLAN
SCALE: 1/4"=1'0"
SCALE:1/4"=1'-0"

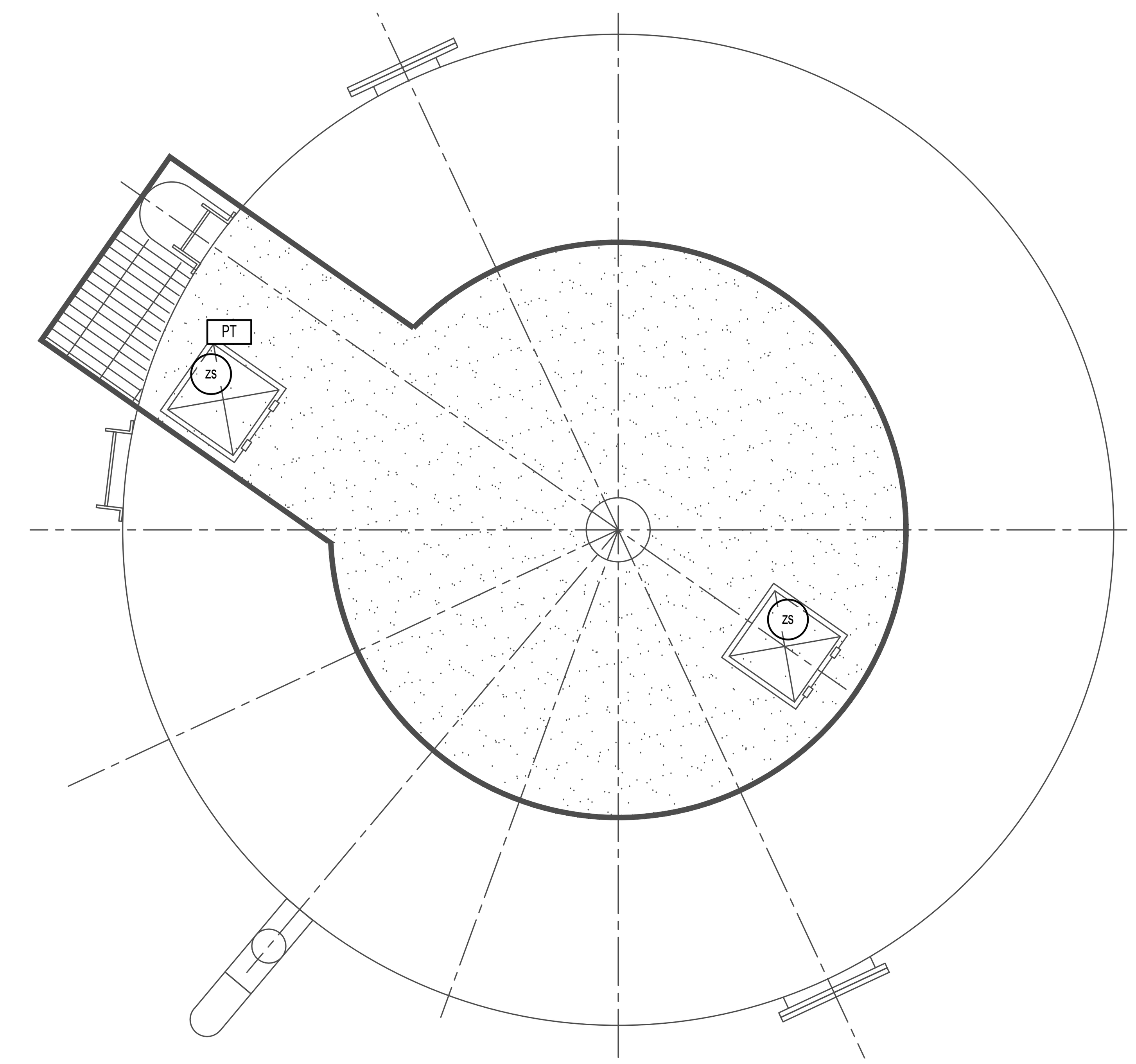

2
E1.7
ELECTRICAL - NEW TANK 5024 FLOOR PLAN
SCALE: 1/4"=1'0"
SCALE:1/4"=1'-0"

GENERAL NOTES:

A. REFERENCE ONE LINE DIAGRAMS ON SHEET E6.1 FOR CONDUIT AND CONDUCTOR REQUIREMENTS.

B. PROVIDE ELECTRICAL DEVICES AS SHOWN ON PLAN.

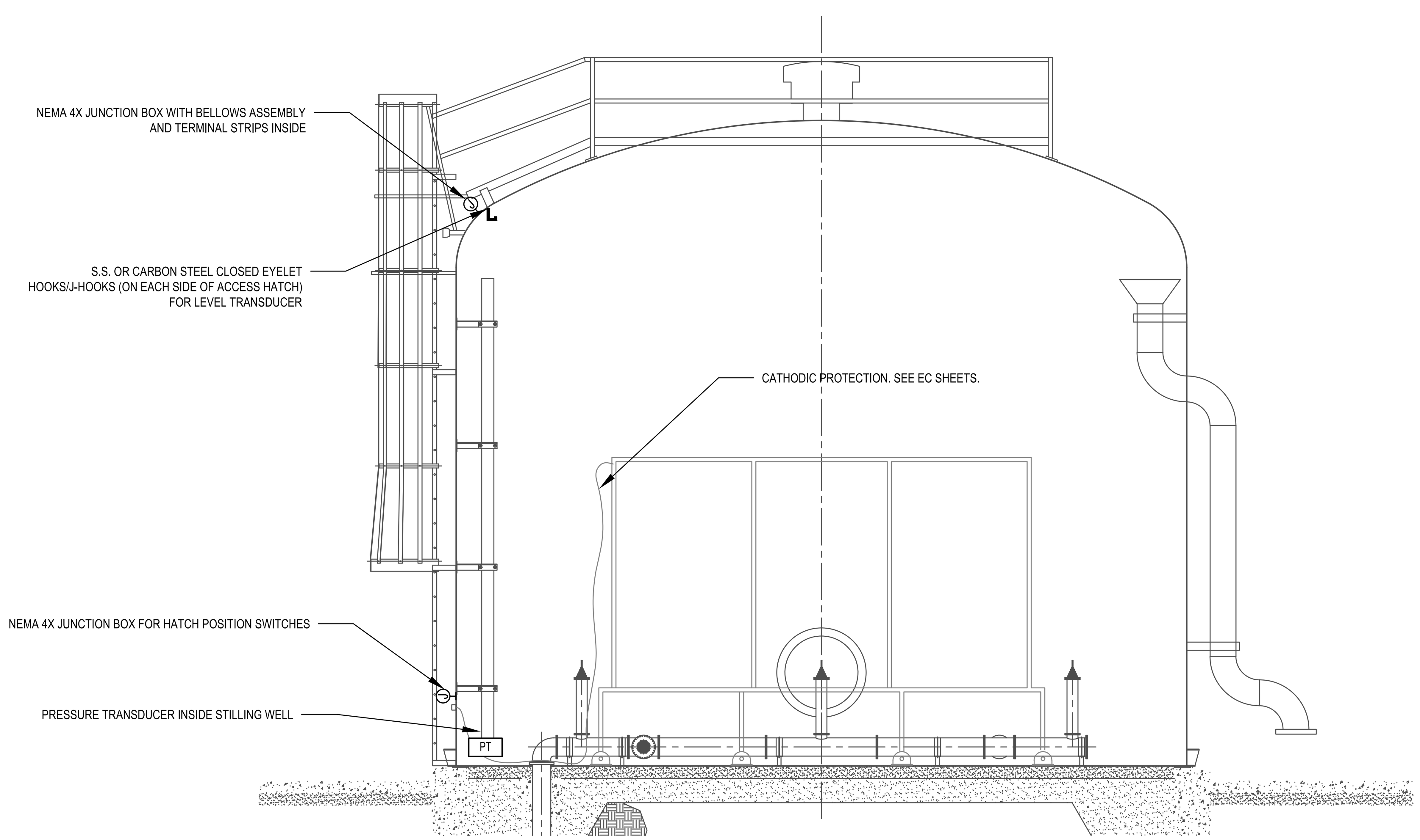

3
E1.7
ELECTRICAL - TANK ELEVATION (TYP.)
SCALE: 1/4"=1'0"
SCALE:1/4"=1'-0"

DPW
FORT MCCOY, WI

MARK	MOD REQUEST # - DESCRIPTION	DATE	MOD #

SEH – TEPA ES JV, LLC
PHONE: 920.380.2830
329 JAY ST, SUITE 301
LA CROSSE, WI 54601

FORT McCOY
REPAIR SOUTH POST
RESERVOIRS
FORT McCOY, WISCONSIN

Designed by: JAM		Date: 3/5/2026
Dwn by: JLR	Ckd by: JPC	Rev.
Reviewed by:		Work Order No 1612
Submitted by: DPW		Project Number 1503

FORT McCOY
DIRECTORATE OF PUBLIC WORKS
2171 SOUTH 8TH AVE.
FORT MC COY, WI 54656

ELECTRICAL
RESERVOIR POWER PLAN

SHEET NUMBER:
E1.7

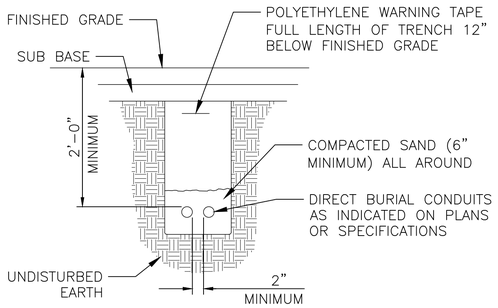

NOTES:

1. BACKFILL OF SELECT COMMON FILL COMPACTED IN LIFTS OF 6" (DEPTH VARIES)

1 DIRECT BURIED CONDUIT

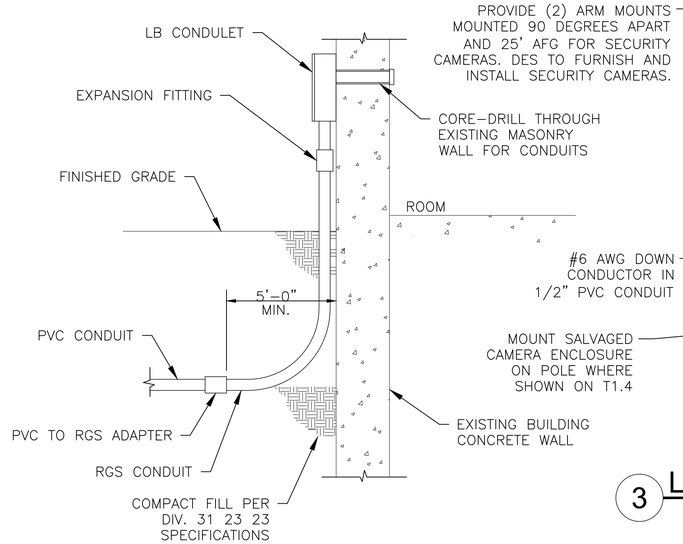

2 BUILDING CONDUIT ENTRY

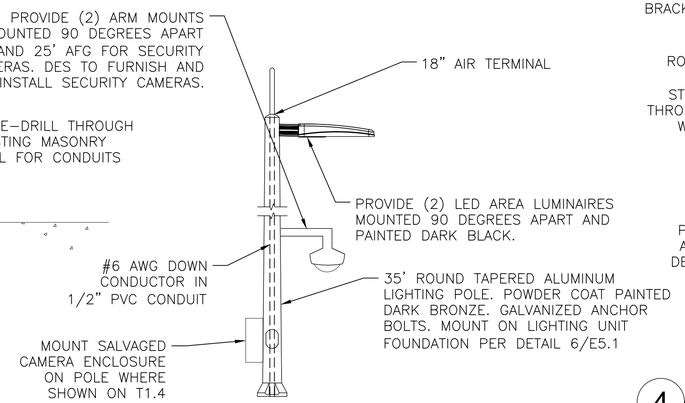

3 LIGHTING UNIT DETAIL

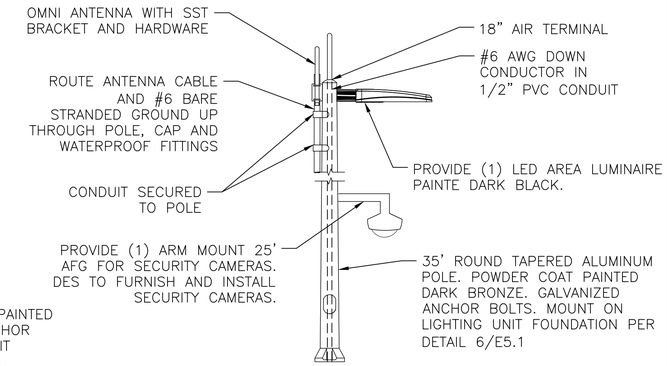

4 ANTENNA MOUNTING DETAIL

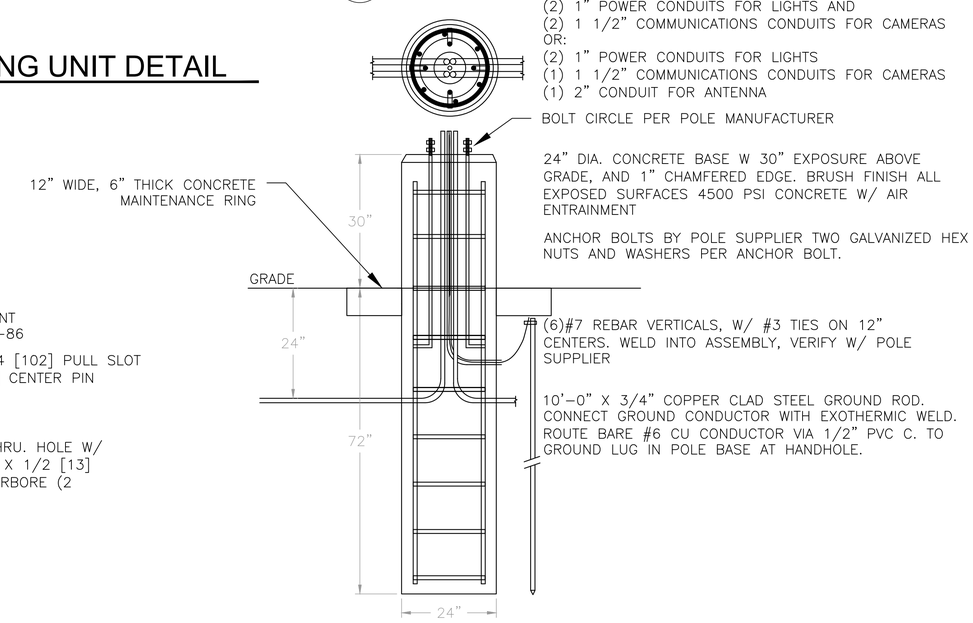

6 LIGHTING UNIT FOUNDATION DETAIL

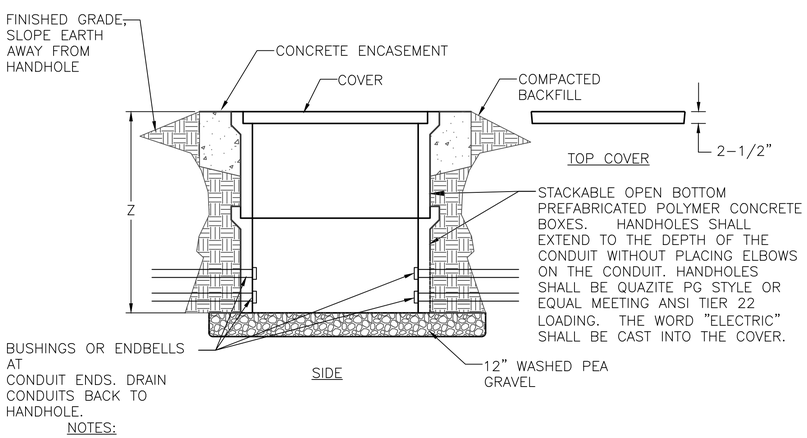

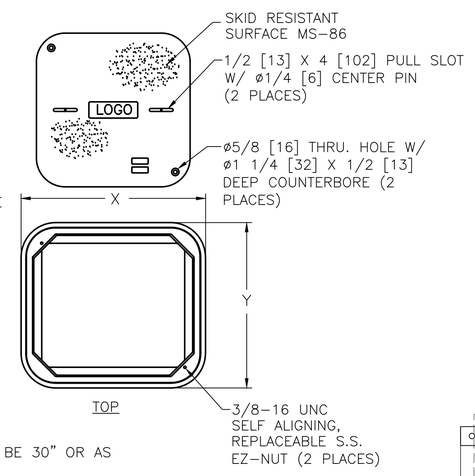

NOTES:

1. ALL HANDHOLES SHALL BE INSTALLED AT DEPTH TO SIT FLUSH WITH FINAL GRADE. DEPTH TO BE 30" OR AS REQUIRED. MINIMUM SIZE HANDHOLES ARE SHOWN, PROVIDE LARGER BOXES AS REQUIRED.
2. ALL HANDHOLES SHALL BE UL LISTED AND BE SUITABLE FOR ANSI TIER 22 LOADING. FOR AREAS OF DELIBERATE HEAVY VEHICLE TRAFFIC, HANDHOLES SHALL BE SUITABLE FOR AASHTO H-20 LOADING.
3. ALL HANDHOLES SHALL BE EQUAL TO QUAZITE SERIES PG OR APPROVED EQUAL.
4. ALL HANDHOLES SHALL BE GASKETED, PRECAST CONCRETE OR POLYMER COMPOSITE SPLICE BOXES SUITABLE FOR POWER AND CONTROL WIRING. PROVIDE ALL HANDHOLES WITH BASES AND STAINLESS STEEL HEX BOLTS.
5. E.C. SHALL PROVIDE CRUSHED STONE AT BASE OF HANDHOLE.
6. ALL HANDHOLES TO BE SIZED PER NEC REQUIREMENTS FOR THE CONDUITS ENTERING THEM. MINIMUM SIZE SHALL BE 36"W X 24"L X 30"D UNLESS NOTED OTHERWISE ON THE PLAN SHEETS.
7. PROVIDE COVER ENGRAVING; "ELECTRIC".

5 HANDHOLE

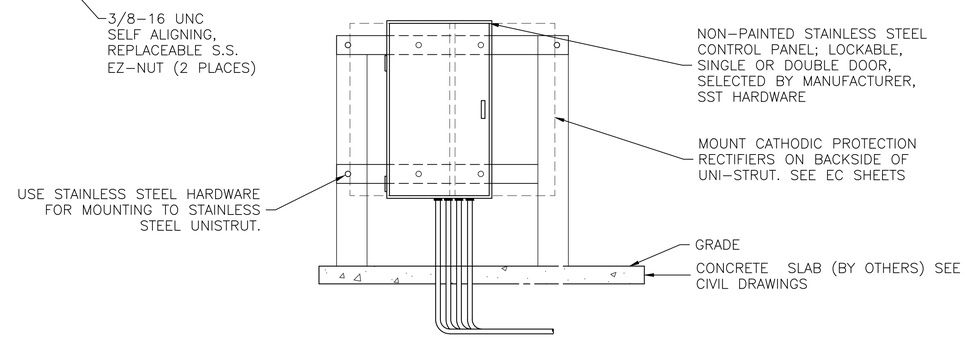

7 CP-1 CONTROL PANEL ELEVATION

DPW
FORT MCCOY, WI

MARK	MOD REQUEST # - DESCRIPTION	DATE	MOD #
A			
B			
C			
D			
E			
F			
G			

SEH
SEH – TEPA ES JV, LLC
PHONE: 920.380.2830
329 JAY ST. SUITE 301
LA CROSSE, WI 54601

FORT McCOY
REPAIR SOUTH POST RESERVOIRS
FORT McCOY, WISCONSIN

Date: 3/5/2026
Rev.
Work Order No. 1612
Project Number 1503
Designed by: JAM
Dwn by: JLR
Ckd by: JPC
Reviewed by:
Submitted by: DPW

FORT McCOY
DIRECTORATE OF PUBLIC WORKS
2171 SCULLY AVE.
FORT MC COY, WI 54656
© FORT MC COY, WI 54656

ELECTRICAL DETAILS

SHEET NUMBER:
E5.1
SHEET 34 of 46

PROPOSED LED LIGHTING

Luminaire Schedule												
Project: SP Reservoirs												
Symbol	Label	Qty	[MANUFAC]	Catalog Number	[LUMINAIRE]	Number Lamps	Light Loss Factor	Luminaire Lumens	Luminaire Watts	Mounting Height	Arm Length	Glare Rating
─□		1	Lithonia Lighting	DSX1 LED P1 40K 80CRI T3M	D-Series Size 1 Area Luminaire P1 Performance Package 4000K CCT 80 CRI Type 3 Medium	Single	0.810	6967	50.9	37.5	1	4
⸗		4	Lithonia Lighting	DSX1 LED P1 40K 80CRI T3M	D-Series Size 1 Area Luminaire P1 Performance Package 4000K CCT 80 CRI Type 3 Medium	2 @ 90 degrees	0.810	6967	50.9	37.5	1	4

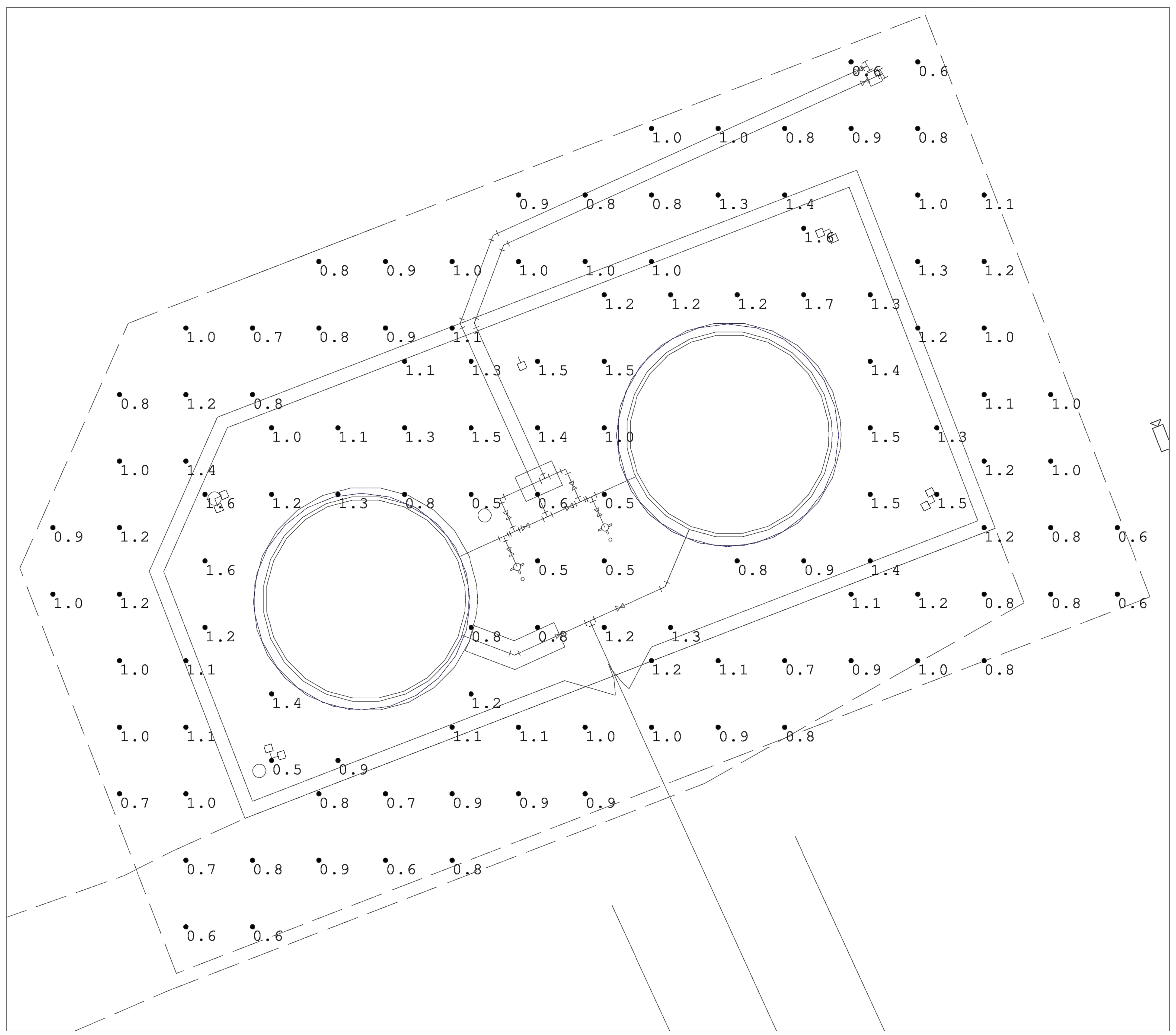

RESERVOIR SITE

Calculation Summary						
Project: SP Reservoirs						
Description	Units	Avg	Avg/Min	Max	Min	Max/Min
Clear Area	Fc	0.94	1.57	1.4	0.6	2.33
South Post Reservoir Site	Fc	1.15	2.30	1.7	0.5	3.40

1 PROPOSED PHOTOMETRICS

DPW
FORT McCOY, WI

MARK	MOD REQUEST # - DESCRIPTION	DATE	MOD #

SEH – TEPA ES JV, LLC
PHONE: 920.380.2830
329 JAY ST, SUITE 301
LA CROSSE, WI 54601

FORT McCOY
REPAIR SOUTH POST
RESERVOIRS
FORT McCOY, WISCONSIN

Date: 3/5/2026
Rev.
Work Order No 1612
Project Number 1503
Designed by: JAM
Dwn by: JLR
Ckd by: JPC
Reviewed by:
Submitted by: DPW

FORT McCOY
DIRECTORATE OF PUBLIC WORKS
2171 SOUTH 8TH AVE.
FORT MC COY, WI 54656

ELECTRICAL
DETAILS

SHEET NUMBER:
E5.2

FIXTURE SCHEDULE					
TYPE	FIXTURE DESCRIPTION	VOLTAGE	MOUNTING	CATALOG NUMBER	LUMENS/ WATTS
PP1	LED W/ 90 DEG CUTOFF W/ PC, 27.5' ROUND TAPERED ALUMINUM POLE EACH LIGHTING UNIT HAS TWO LUMINAIRES MOUNTED BACK-TO-BACK	MVOLT	POLE	LITHONIA: DSX1 LED P1 40K 80CRI T3M MVOLT RPA PER SF DBLXD DLL127F 1.5 JU POLE =HAPCO RTA35D7B4-BA	7,594 51

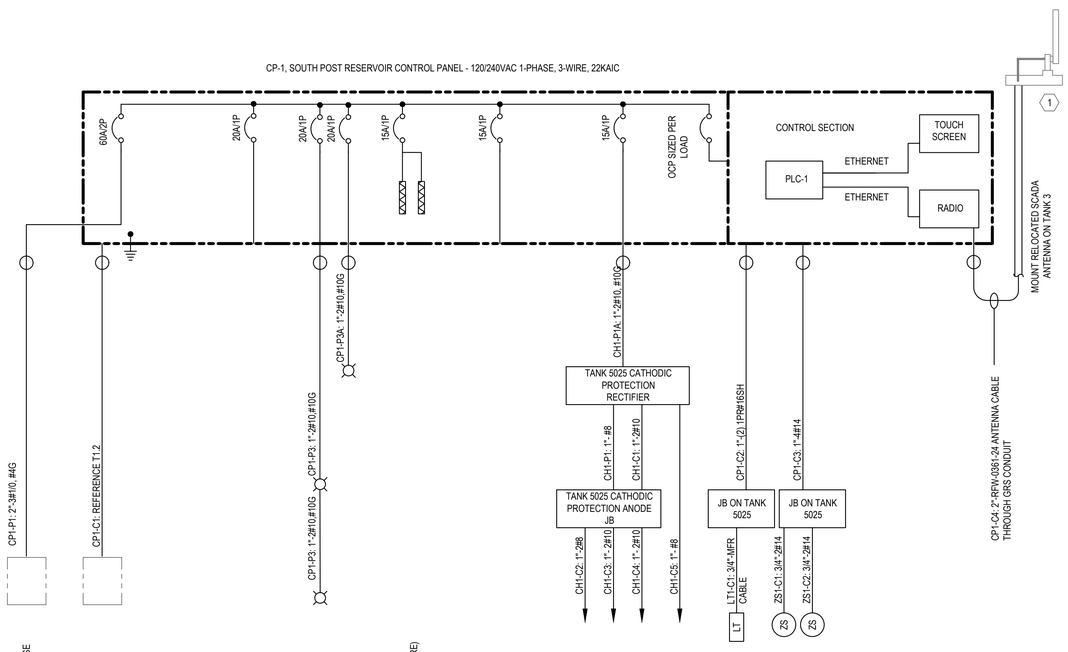

1 PHASE 1 ONE LINE DIAGRAM

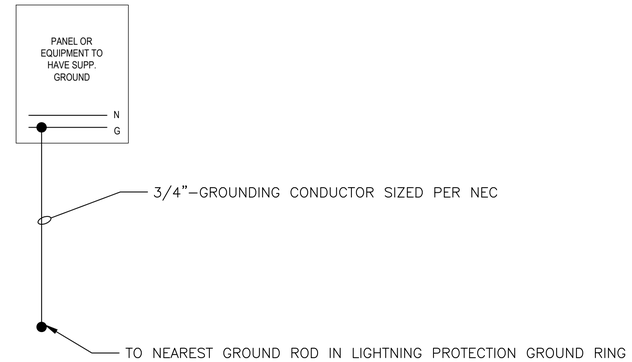

3 GROUNDING DIAGRAM

KEYNOTES:

1. RELOCATE EXISTING RADIO INTO CONTROL PANEL.

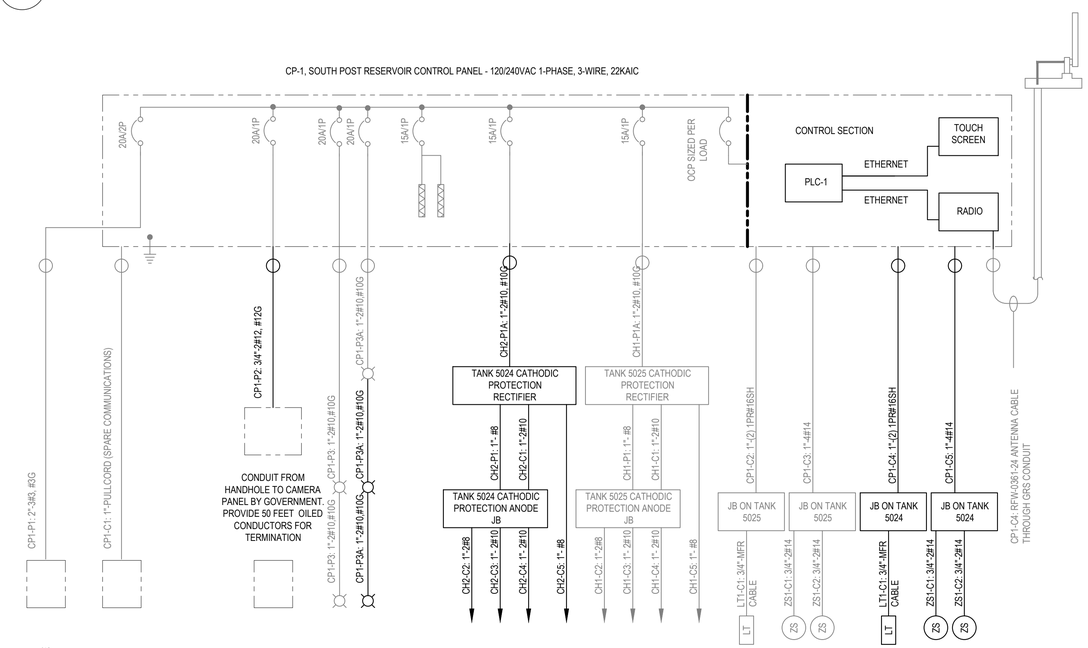

2 PHASE 2 ONE LINE DIAGRAM

DPW
FORT MCCOY, WI

MARK	MOD REQUEST # - DESCRIPTION	DATE	MOD #
A			
A			
A			
A			
A			
A			
A			

SEH
SEH – TEPA ES JV, LLC
PHONE: 920.380.2830
329 JAY ST, SUITE 301
LA CROSSE, WI 54601

FORT McCOY
REPAIR SOUTH POST
RESERVOIRS
FORT McCOY, WISCONSIN

Designed by: JAM
Date: 3/5/2026
Drwn by: JLR
Ckd by: JPC
Rev:
Reviewed by:
Work Order No. 1612
Submitted by: DPW
Project Number 1503

FORT McCOY
DIRECTORATE OF PUBLIC WORKS
2171 SILVER STREET
FORT MC COY, WI 54656

ELECTRICAL
ONE LINE DIAGRAMS

SHEET NUMBER:
E6.1

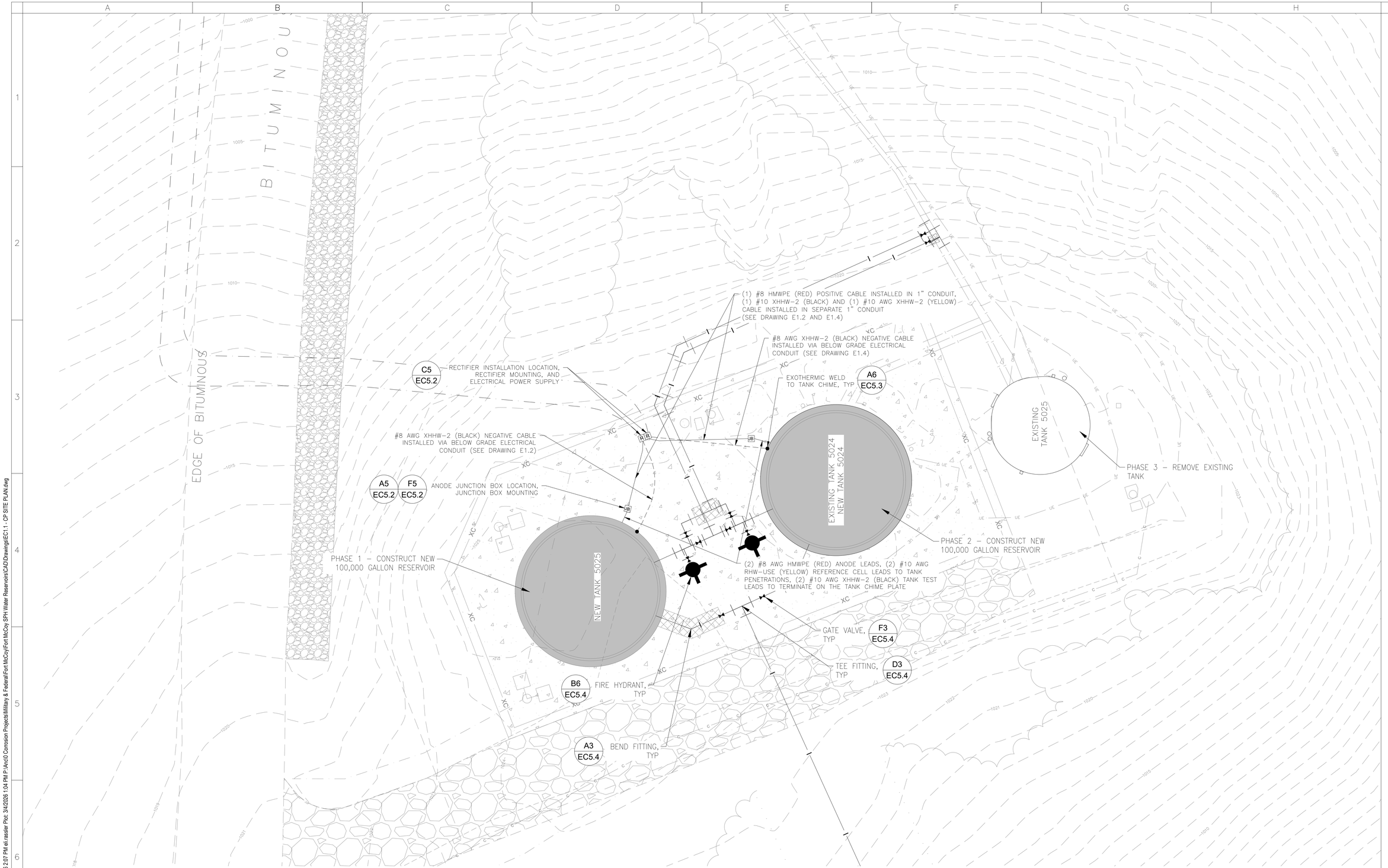

D6 EC1.1 **SITE PLAN**
SCALE: 1"=10'-0"

DPW
FORT MCCOY, WI

MARK	MOD. REQUEST # – DESCRIPTION	DATE	MOD. #

COFFMAN ENGINEERS
371 Canal Park Drive
SUITE 210
DULUTH, MN 55802
ph 218.216.7220
www.coffman.com

FORT McCOY
REPAIR SOUTH POST
RESERVOIRS
FORT McCOY, WISCONSIN

Designed by: ABR	Date: 03/05/2026
Dwn by: ENR	Ckd by: AGO
Reviewed by: TRD	Rev. 0
Submitted by: DPW	Work Order No 1612
	Project Number ____

FORT McCOY
DIRECTORATE OF PUBLIC WORKS
2171 SOUTH 8TH AVE.
FORT MC COY, WI 54656

CATHODIC PROTECTION
SITE PLAN

SHEET NUMBER:
EC1.1
SHEET 37 of 46

Save: 2/16/2026 2:07 PM eli.ressler Plot: 3/4/2026 1:04 PM P:\ANC\D Corrosion Projects\Military & Federal\Fort McCoy\Fort McCoy SPH Water Reservoirs\CAD\Drawings\EC1.1 - CP SITE PLAN.dwg

Plot date: 01/27/2026 File path: P:\ANC\D CORROSION PROJECTS\MILITARY & FEDERAL\FORT MCCOY\FORT MCCOY SPH WATER RESERVOIRS\CAD\DRAWINGS\EC1.1 – CP SITE PLAN.DWG

SHEET NOTES:

1. CATHODIC PROTECTION SYSTEM IS BASED ON TANK 5024 AND 5025 CONSTRUCTION OF WELDED STEEL AND PROVIDED WITH A HIGH PERFORMANCE BONDED DIELECTRIC LINING SYSTEM ON ALL INTERNAL TANK SURFACES AND INCLUDING PIPING AND SUPPORTS.
2. ALL INTERNAL CATHODIC PROTECTION COMPONENTS INCLUDING ANODES, CABLING, STATIONARY REFERENCE ELECTRODES, AND SUPPORT STRUCTURE SHALL BE NSF/ANSI 61 COMPLIANT.
3. GLUE ALL PVC JOINTS WITH NSF/ANSI COMPLIANT PRODUCT.
4. DO NOT ENERGIZE CATHODIC PROTECTION SYSTEMS UNTIL AUTHORIZATION IS PROVIDED BY THE OWNER OR OWNERS REPRESENTATIVE.
5. IT IS ASSUMED THE PASSIVE MIXING PIPING, PIPE SUPPORTS, AND ASSOCIATED COMPONENTS WILL BE METALLIC, ELECTRICALLY CONTINUOUS, AND PROVIDED WITH A HIGH PERFORMANCE BONDED DIELECTRIC COATING SYSTEM.

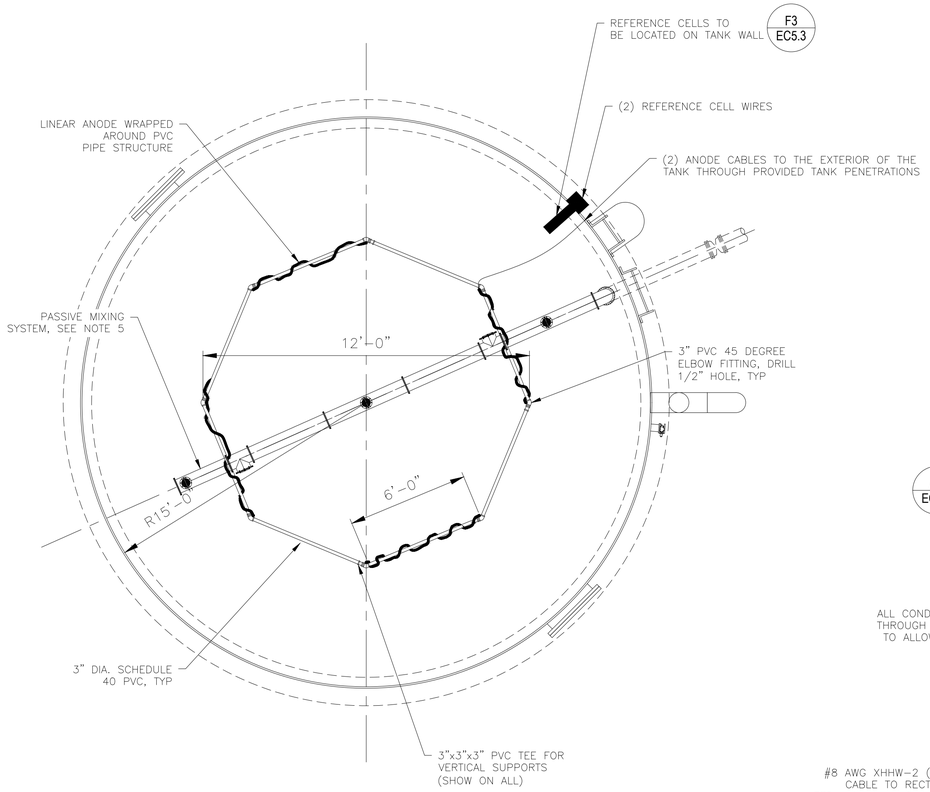

A6 EC5.1 TYPICAL WATER STORAGE RESERVOIR ANODE SUPPORT DETAIL
SCALE: NTS

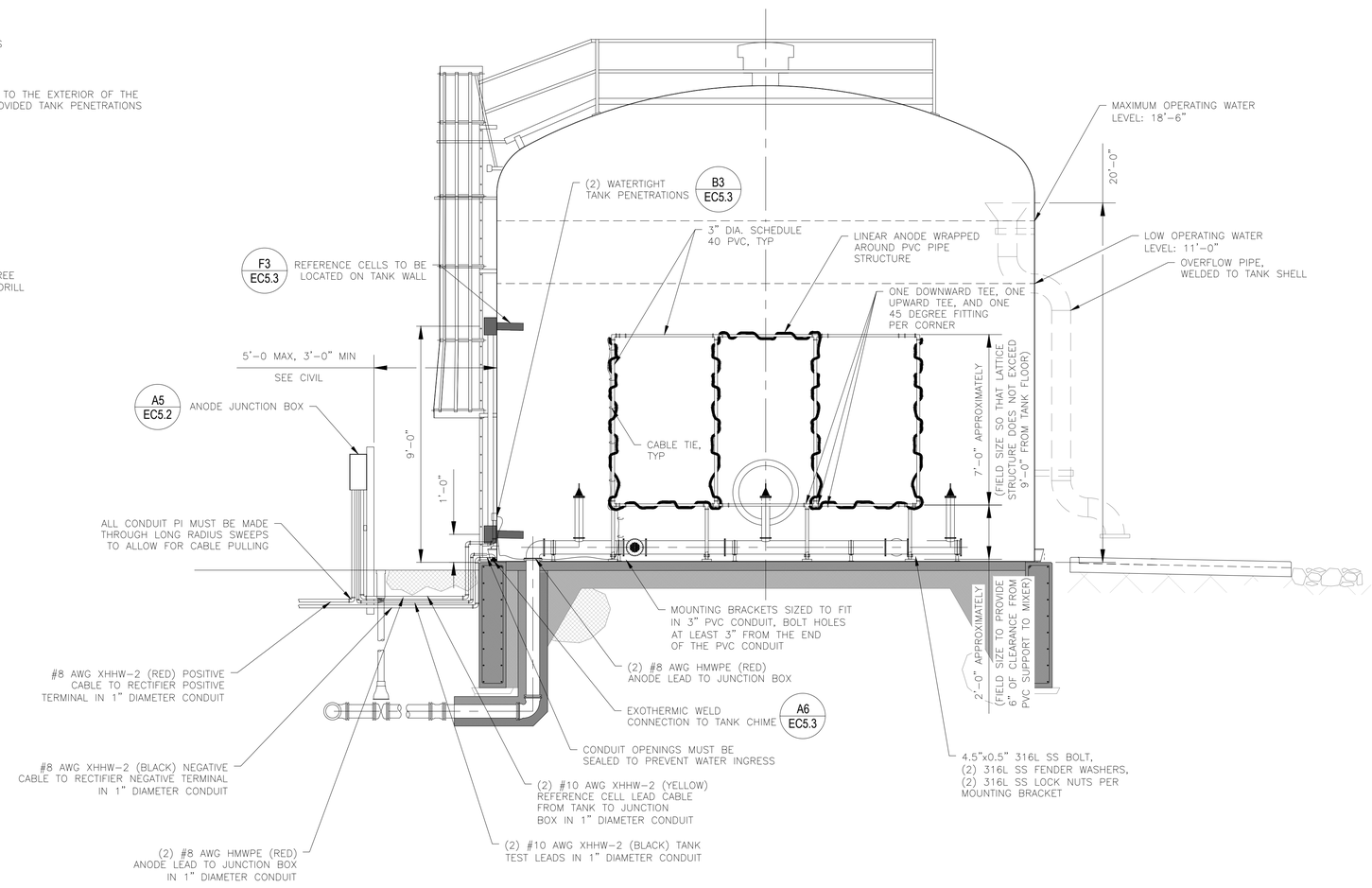

E6 EC5.1 TYPICAL WATER STORAGE RESERVOIR ANODE SUPPORT SECTION DETAIL
SCALE: NTS

DPW
FORT MCCOY, WI

MARK	MOD REQUEST # – DESCRIPTION	DATE	MOD #

COFFMAN ENGINEERS
371 Canal Park Drive
SUITE 210
DULUTH, MN 55802
ph 218.216.7220
www.coffman.com

FORT McCOY
REPAIR SOUTH POST
RESERVOIRS
FORT McCOY, WISCONSIN

Designed by: ABR	Date: 03/05/2026	
Dwn by: ENR	Ckd by: AGO	Rev. 0
Reviewed by: TRD		Work Order No 1612
Submitted by: DPW		Project Number

FORT McCOY
DIRECTORATE OF PUBLIC WORKS
2171 SOUTH 8TH AVE.
FORT MC COY, WI 54656

CATHODIC PROTECTION DETAILS

SHEET NUMBER:
EC5.1
SHEET 38 of 46

Plot date: 01/27/2026 File path: P:\ANC\0 CORROSION PROJECTS\MILITARY & FEDERAL\FORT MCCOY\FORT MCCOY SPH WATER RESERVOIRS\CAD\DRAWINGS\EC5.1 – CP DETAILS.DWG

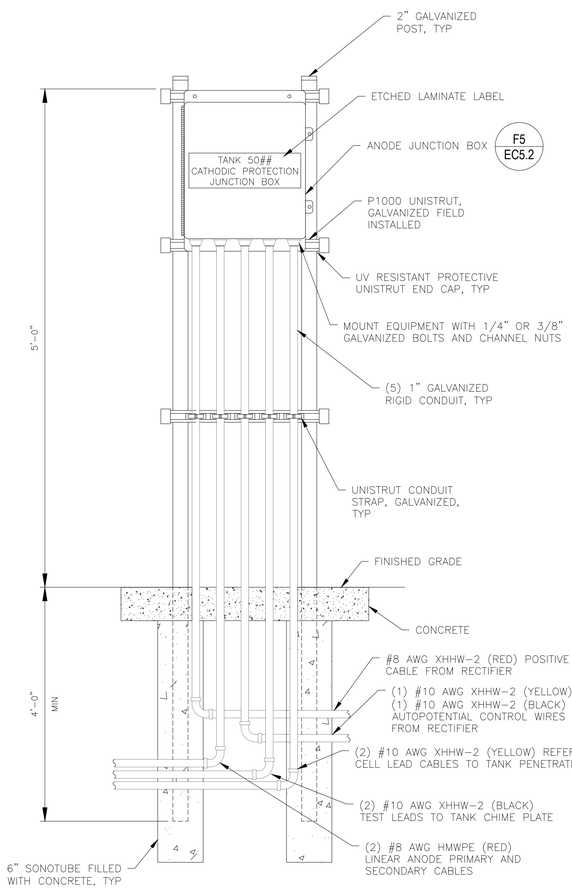

TYPICAL POST MOUNTED CATHODIC PROTECTION JUNCTION BOX

A5 / EC5.2

SCALE: NTS

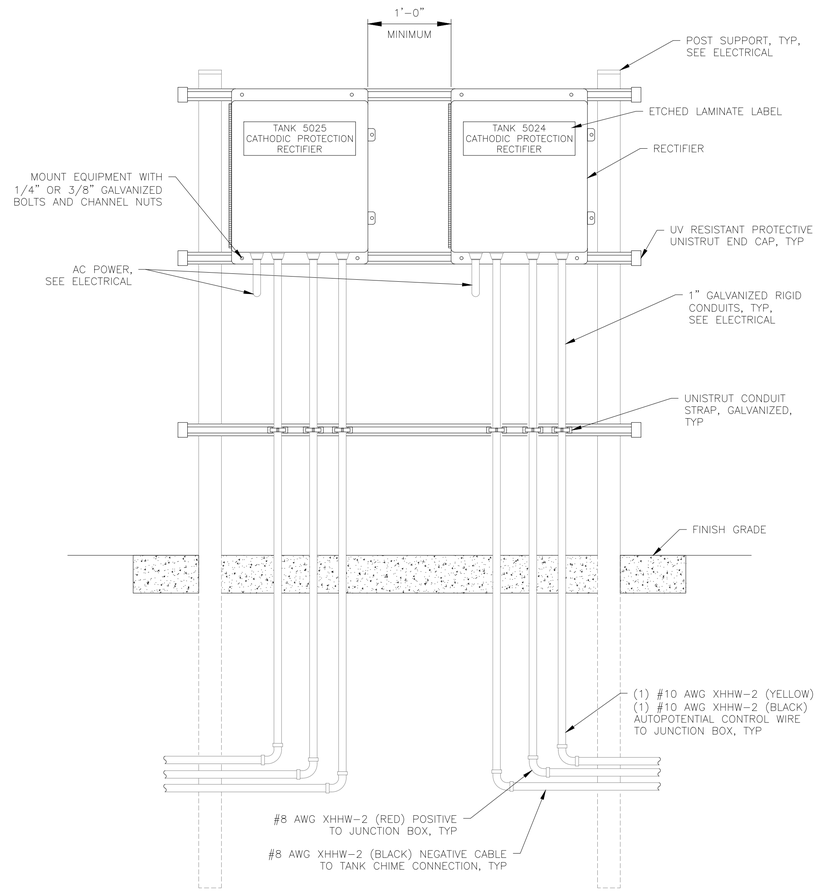

RACK RECTIFIER INSTALLATION DETAIL

C5 / EC5.2

SCALE: NTS

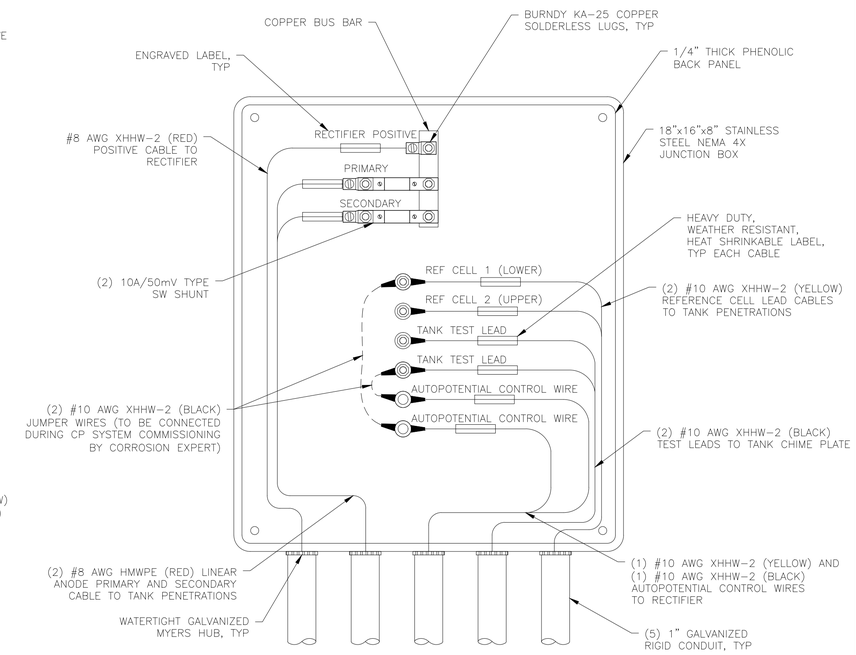

TYPICAL CATHODIC PROTECTION JUNCTION BOX DETAIL

F5 / EC5.2

SCALE: NTS

DPW
FORT MCCOY, WI

MARK	MOD REQUEST # – DESCRIPTION	DATE	MOD #

COFFMAN ENGINEERS
371 Canal Park Drive
SUITE 210
DULUTH, MN 55802
ph 218.216.7220
www.coffman.com

FORT McCOY
REPAIR SOUTH POST
RESERVOIRS
FORT McCOY, WISCONSIN

Designed by: ABR		Date: 03/05/2026	
Dwn by: ENR	Ckd by: AGO	Rev. 0	Work Order No 1612
Reviewed by: TRD		Submitted by: DPW	Project Number

FORT McCOY
DIRECTORATE OF PUBLIC WORKS
2171 SOUTH 8TH AVE.
FORT MC COY, WI 54656

CATHODIC PROTECTION DETAILS

SHEET NUMBER:
EC5.2

SHEET 39 of 46

File path: P:\ANC\0 CORROSION PROJECTS\MILITARY & FEDERAL\FORT MCCOY\FORT MCCOY SPH WATER RESERVOIRS\CAD\DRAWINGS\EC5.2 – CP DETAILS.DWG

Plot date: 04/03/2026

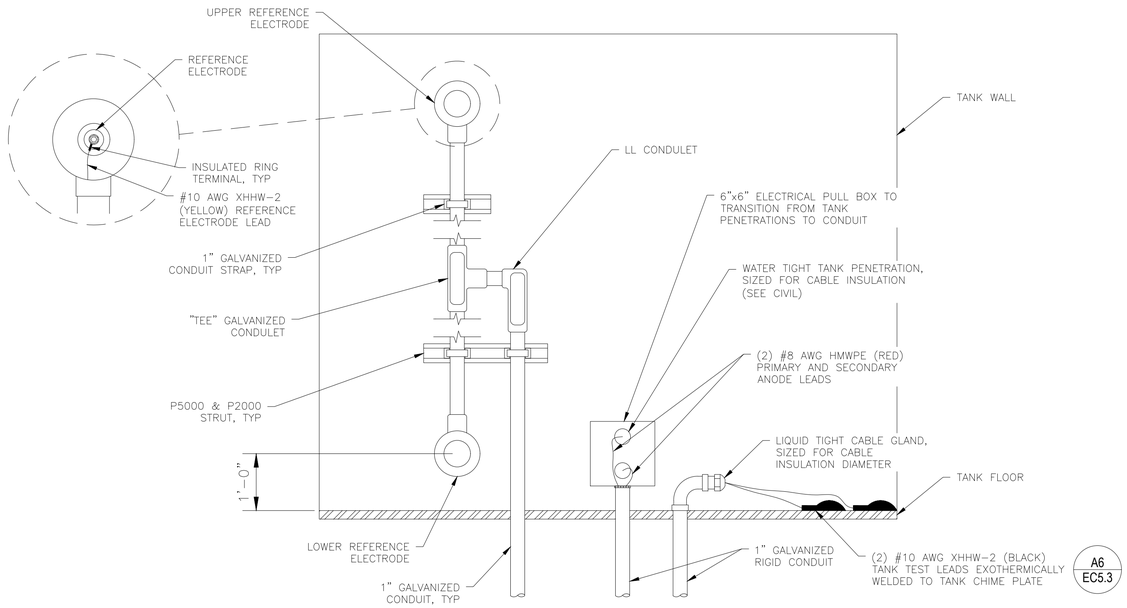

B3 / EC5.3 TANK PENETRATION DETAIL

SCALE: NTS

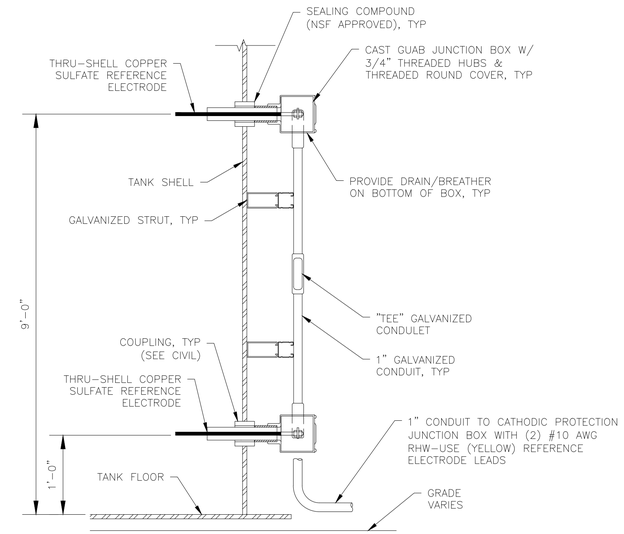

F3 / EC5.3 REFERENCE ELECTRODE INSTALLATION DETAIL

SCALE: NTS

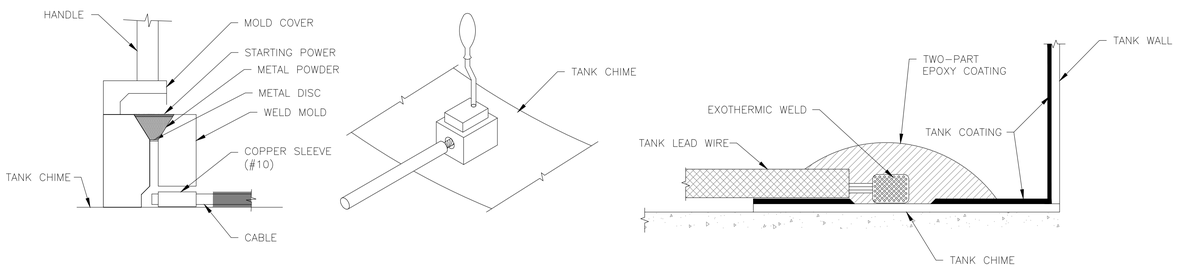

GENERAL PROCEDURE:

PROCEDURE SHOWN BELOW IS ONLY TO BE USED AS A GENERAL GUIDE, SEE MANUFACTURERS LITERATURE FOR SPECIFIC INSTRUCTIONS.

1. CLEAN & FILE STRUCTURE TO BRIGHT METAL FILE CROSS HATCH PATTERN ON SURFACE.
2. STRIP INSULATION FROM WIRE SUFFICIENT TO CLEAR WELD MOLD, INSTALL COPPER SLEEVE.
3. PLACE METAL DISK IN MOLD AND PREHEAT TO APPROXIMATELY 150°F.
4. POUR IN WELD METAL, STARTING POWDER, AND INSERT CABLE INTO MOLD.
5. PLACE MOLD AGAINST STRUCTURE AND IGNITE POWDER.
6. REMOVE SLAG FROM CONNECTION, TEST WELD WITH SHARP HAMMER BLOW.
7. COVER ALL EXPOSED METALS WITH HANDY CAP IP XL PER MANUFACTURERS INSTRUCTIONS.

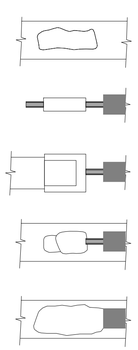

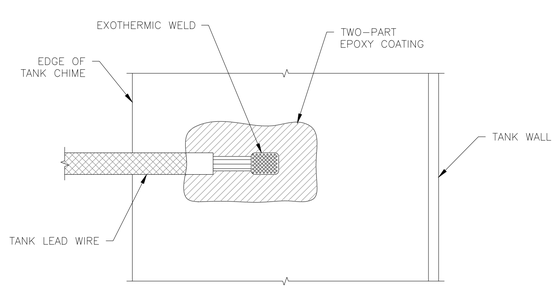

NOTE:

1. MAXIMUM CADWELD CHARGE OF 15 GRAMS, F33 ALLOY.
2. NO MECHANICAL CRIMPING ALLOWED.

A6 / EC5.3 TANK EXOTHERMIC WELD CONNECTION AND PATCH DETAIL

SCALE: NTS

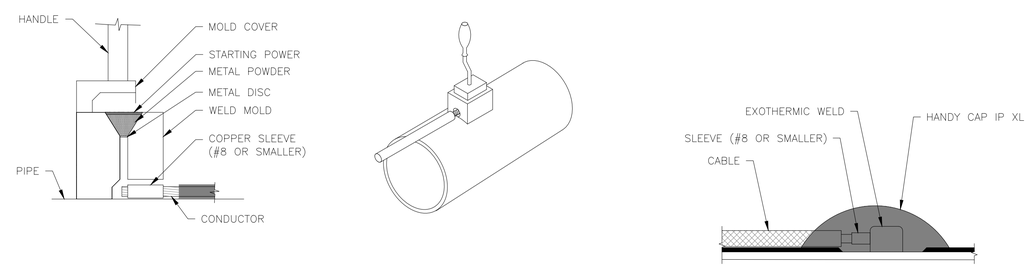

GENERAL PROCEDURE:

PROCEDURE SHOWN BELOW IS ONLY TO BE USED AS A GENERAL GUIDE, SEE MANUFACTURERS LITERATURE FOR SPECIFIC INSTRUCTIONS.

1. CLEAN & FILE STRUCTURE TO BRIGHT METAL FILE CROSS HATCH PATTERN ON SURFACE.
2. STRIP INSULATION FROM WIRE SUFFICIENT TO CLEAR WELD MOLD, INSTALL COPPER SLEEVE.
3. PLACE METAL DISK IN MOLD AND PREHEAT TO APPROXIMATELY 150°F.
4. POUR IN WELD METAL, STARTING POWDER, AND INSERT CABLE INTO MOLD.
5. PLACE MOLD AGAINST STRUCTURE AND IGNITE POWDER.
6. REMOVE SLAG FROM CONNECTION, TEST WELD WITH SHARP HAMMER BLOW.
7. COVER ALL EXPOSED METALS WITH HANDY CAP IP XL PER MANUFACTURERS INSTRUCTIONS.

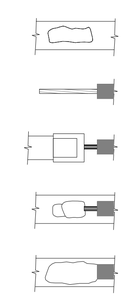

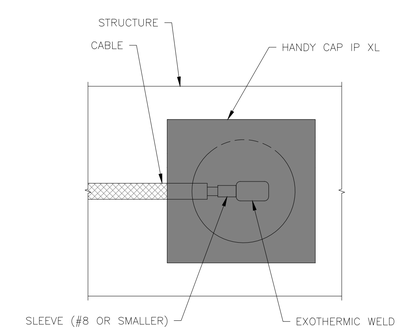

NOTE:

1. MAXIMUM CADWELD CHARGE OF 32 GRAMS, XF19 ALLOY.

E6 / EC5.3 DUCTILE IRON EXOTHERMIC WELD CONNECTION AND PATCH DETAIL

SCALE: NTS

DPW
FORT MCCOY, WI

MARK	MOD REQUEST # – DESCRIPTION	DATE	MOD #

COFFMAN ENGINEERS
371 Canal Park Drive
SUITE 210
DULUTH, MN 55802
ph 218.216.7220
www.coffman.com

FORT McCOY
REPAIR SOUTH POST RESERVOIRS
FORT McCOY, WISCONSIN

FORT McCOY
DIRECTORATE OF PUBLIC WORKS
2171 SOUTH 8TH AVE.
FORT MC COY, WI 54656

CATHODIC PROTECTION DETAILS

Designed by: ABR	Date: 03/05/2026
Dwn by: ENR	Ckd by: AGO
Reviewed by: TRD	Rev. 0
Submitted by: DPW	Work Order No 1612
	Project Number

SHEET NUMBER:
EC5.3
SHEET 40 of 46

File path: P:\ANC\0_CORROSION PROJECTS\MILITARY & FEDERAL\FORT MCCOY\FORT MCCOY SPH WATER RESERVOIRS\CAD\DRAWINGS\EC5.3 – CP DETAILS.DWG

Plot date: 01/27/2026

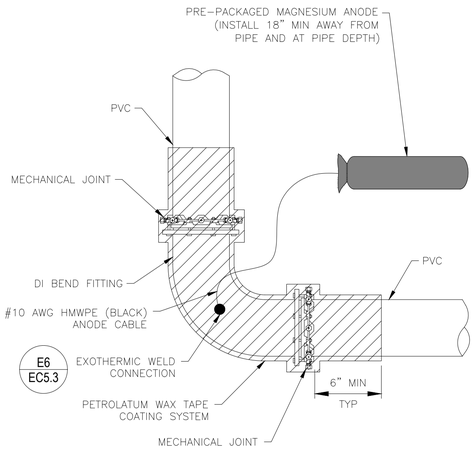

TYPICAL BEND FITTING AND ANODE INSTALLATION DETAIL

A3 / EC5.4 SCALE: NTS

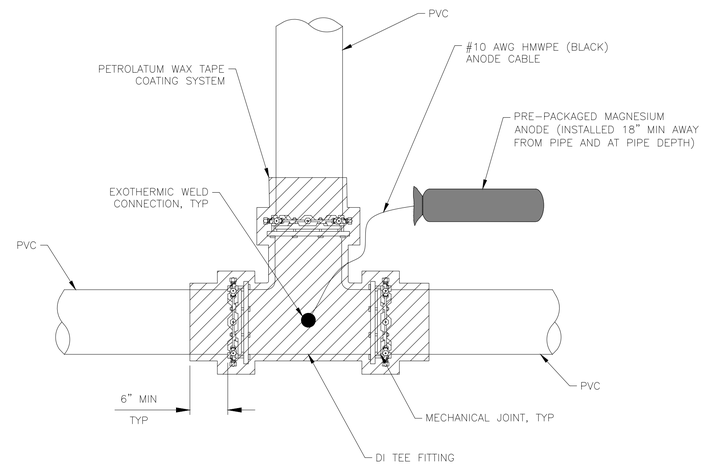

TYPICAL TEE FITTING AND ANODE INSTALLATION DETAIL

D3 / EC5.4 SCALE: NTS

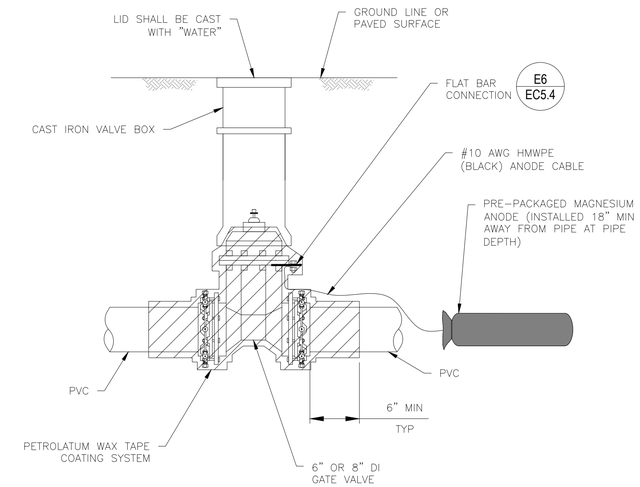

TYPICAL GATE VALVE AND ANODE INSTALLATION DETAIL

F3 / EC5.4 SCALE: NTS

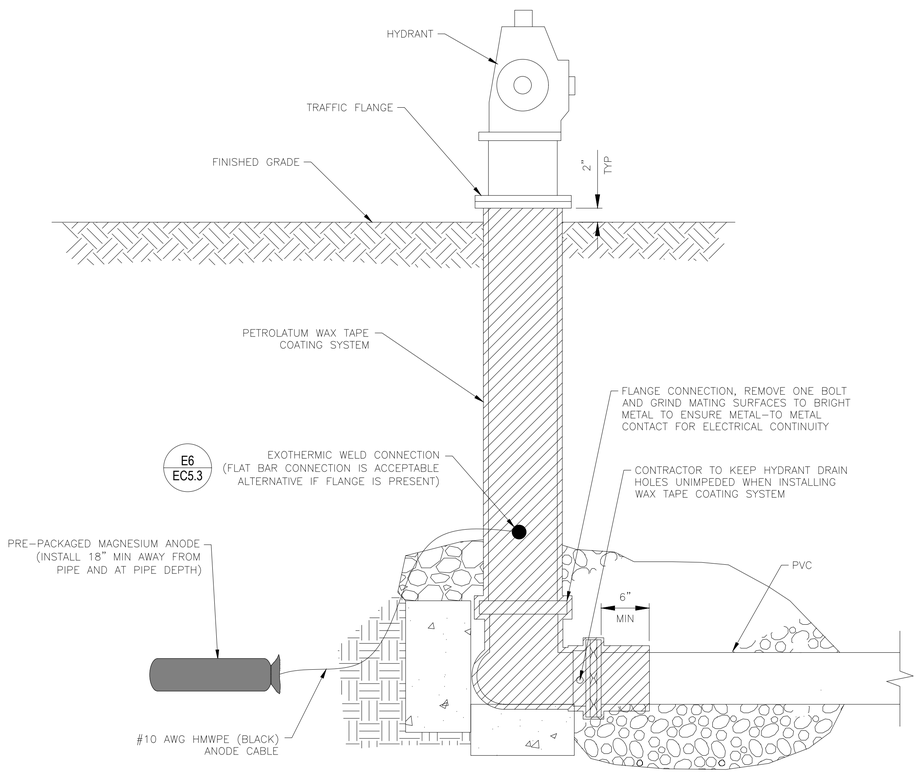

TYPICAL FIRE HYDRANT AND ANODE INSTALLATION DETAIL

B6 / EC5.4 SCALE: NTS

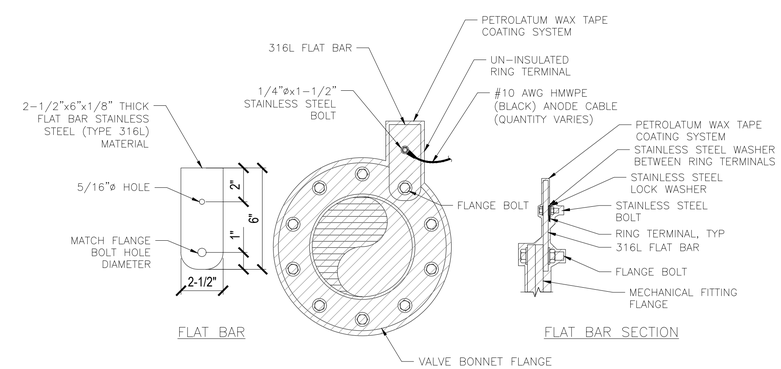

NOTES:

1. REMOVE THE FLANGE COATING DOWN TO BARE METAL PRIOR TO ATTACHING THE FLAT BAR SO THAT A METAL TO METAL CONNECTION IS ESTABLISHED.
2. THE 316L FLAT BAR SHALL BE INSTALLED ON THE VALVE SIDE OF THE FLANGE JOINTS.
3. PROVIDE PETROLATUM WAX TAPE COATING SYSTEM AROUND FLAT BAR, RING CONNECTORS, BOLT, AND A MINIMUM OF 3" DOWN ON CABLE INSULATION TO ENCAPSULATE CONNECTION.

TYPICAL FLAT BAR CONNECTION DETAIL

E6 / EC5.4 SCALE: NTS

DPW FORT MCCOY, WI

MARK	MOD REQUEST # - DESCRIPTION	DATE	MOD #

COFFMAN ENGINEERS
371 Canal Park Drive
SUITE 210
DULUTH, MN 55802
ph 218.216.7220
www.coffman.com

FORT McCOY
REPAIR SOUTH POST RESERVOIRS
FORT McCOY, WISCONSIN

Designed by: ABR			Date: 03/05/2026
Dwn by: ENR	Ckd by: AGO	Rev. 0	
Reviewed by: TRD		Work Order No 1612	
Submitted by: DPW		Project Number	

FORT McCOY DIRECTORATE OF PUBLIC WORKS 2171 SOUTH 8TH AVE. FORT MC COY, WI 54656

CATHODIC PROTECTION DETAILS

SHEET NUMBER:

EC5.4

SHEET 41 of 46

File path: P:\ANC\0 CORROSION PROJECTS\MILITARY & FEDERAL\FORT MCCOY\FORT MCCOY SPH WATER RESERVOIRS\CAD\DRAWINGS\EC5.4 - CP DETAILS.DWG

Plot date: 01/27/2026

GENERAL NOTES:

A. COORDINATE ALL REMOVAL WORK WITH ALL OTHER CONTRACTORS.

B. ALL EXISTING EQUIPMENT TO REMAIN OPERATIONAL UNTIL NEW EQUIPMENT IS OPERATIONAL.

C. FIELD VERIFY ALL ELECTRICAL EQUIPMENT LOCATIONS PRIOR TO REMOVAL AND IDENTIFY ANY ISSUES NOT SHOWN ON PLANS.

KEYNOTES:

1. DES TO DISCONNECT CONDUCTORS FROM CAMERA AND FROM CAMERA PANEL FOR DEMOLITION. DES TO SALVAGE CAMERAS.

2. DEMOLISH CAMERA POLE, BASE, AND ASSOCIATED HANDHOLE. DEMOLISH ASSOCIATED CONDUIT AND CONDUCTORS TO SOURCE.

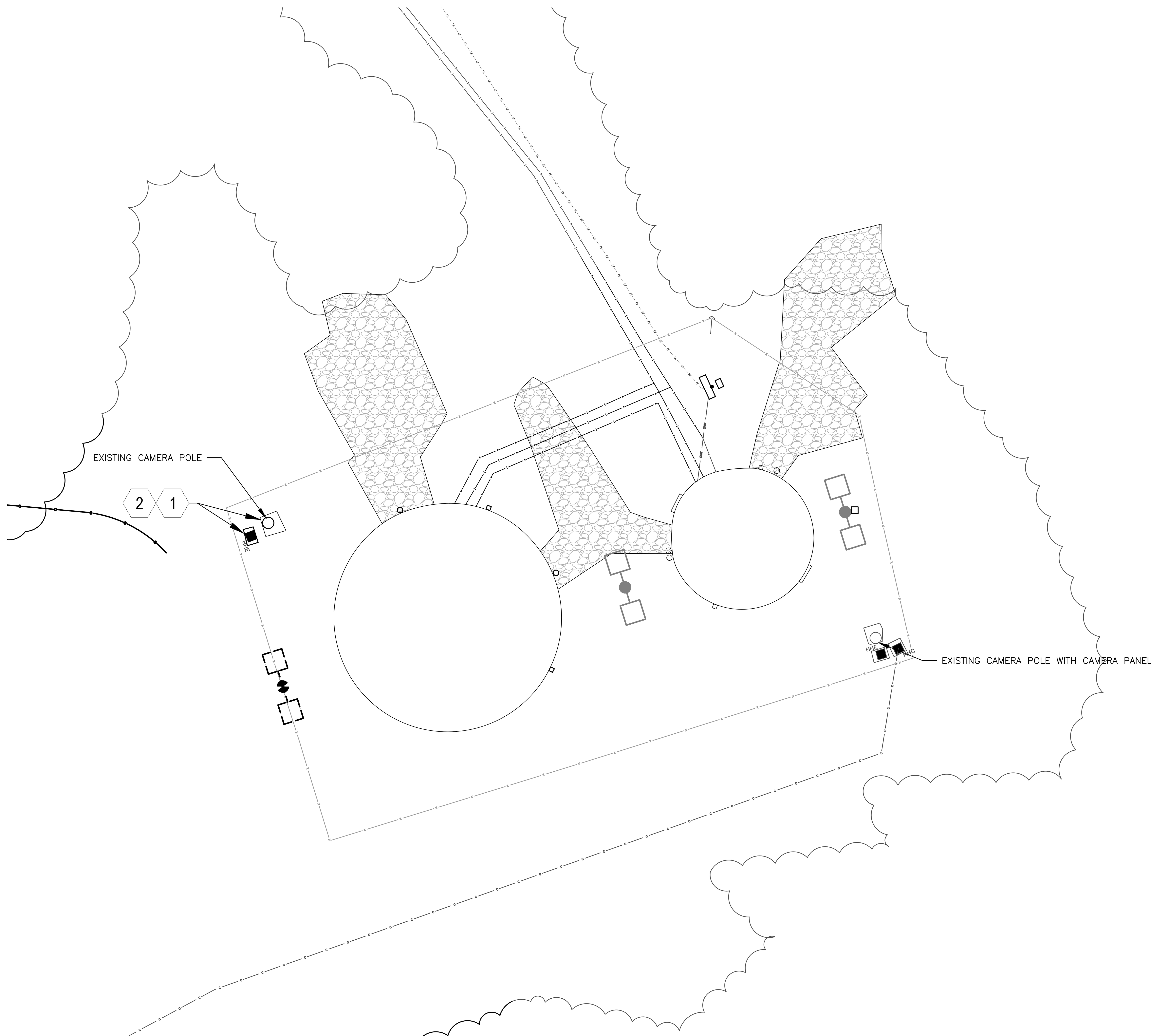

N

1 / T1.1 TELECOMMUNICATIONS - SITE DEMOLITION PLAN

SCALE: 1"=10'

0 10 20

SCALE IN FEET

DPW
FORT McCOY, WI

SEH – TEPA ES JV, LLC
PHONE: 920.380.2830
329 JAY ST, SUITE 301
LA CROSSE, WI 54601

MARK	MOD REQUEST # - DESCRIPTION	DATE	MOD #

FORT McCOY
REPAIR SOUTH POST RESERVOIRS
FORT McCOY, WISCONSIN

Designed by: JAM	Date: 3/5/2026		
Dwn by: JLR	Ckd by: JPC	Rev.	
Reviewed by:		Work Order No 1612	
Submitted by: DPW		Project Number 1503	

FORT McCOY
DIRECTORATE OF PUBLIC WORKS
2171 SOUTH 8TH AVE.
FORT MC COY, WI 54656

TELECOMMUNICATIONS
SITE DEMOLITION PLAN
PHASE 1

SHEET NUMBER:

T1.1

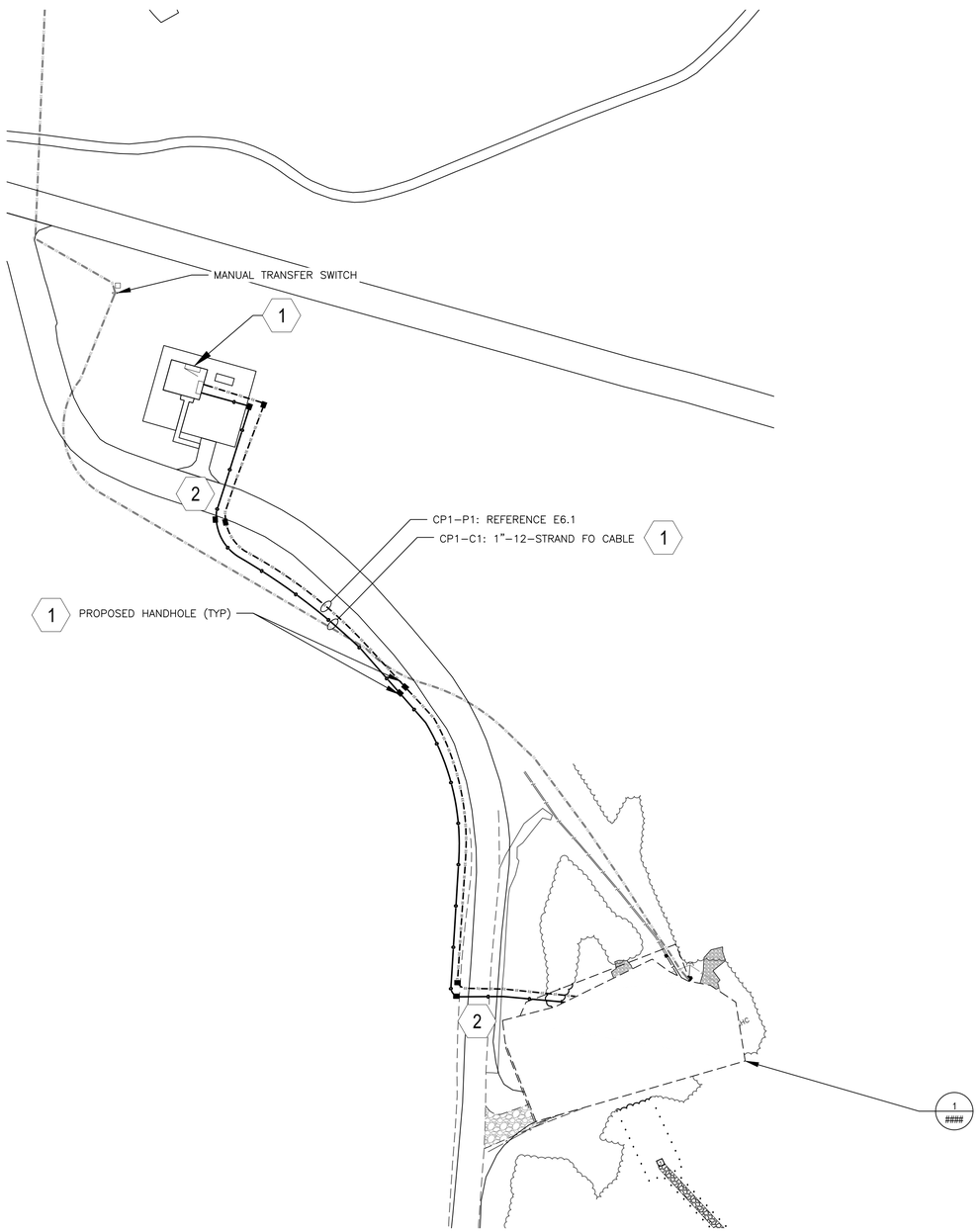

1 / T1.2 ELECTRICAL - OVERALL SITE PLAN

SCALE: 1"=10'

0 10 20

SCALE IN FEET

N

GENERAL NOTES:

A. ALL CONDUIT SHOWN IS APPROXIMATE. COORDINATE WITH ALL OTHER TRADES AND UTILITIES TO AVOID CONFLICTS WITH NEW WORK AND EXISTING CONDITIONS PRIOR TO INSTALLATION.

B. REFERENCE DETAIL ON SHEET T5.1 FOR HANDHOLE INSTALLATION DETAILS.

C. REFERENCE DETAIL ON SHEET T5.1 FOR DIRECT BURIED CONDUIT DETAILS.

D. REFERENCE DETAIL ON SHEET T5.1 FOR BUILDING CONDUIT ENTRY.

KEYNOTES:

1. PROVIDE NEW CONDUIT AND FIBER OPTIC LINK FROM RESERVOIR CONTROL PANEL TO WELL 31 SCADA PANEL.

2. DIRECTIONAL BORE UNDER ROADWAYS.

DPW
FORT MCCOY, WI

MARK	MOD REQUEST # - DESCRIPTION	DATE	MOD #
A			
A			
A			
A			
A			
A			
A			

SEH – TEPA ES JV, LLC
PHONE: 920.380.2830
329 JAY ST, SUITE 301
LA CROSSE, WI 54601

FORT McCOY
REPAIR SOUTH POST
RESERVOIRS
FORT McCOY, WISCONSIN

Designed by: JAM
Date: 3/5/2026
Own by: JLR
Ckd by: JPC
Rev:
Reviewed by:
Work Order No 1612
Submitted by: DPW
Project Number 1503

FORT McCOY
DIRECTORATE OF PUBLIC WORKS
2171 SOUTH 5TH AVE.
FORT MC COY, WI 54656

TELECOMMUNICATIONS
OVERALL SITE PLAN
PHASE 1

SHEET NUMBER:
T1.2

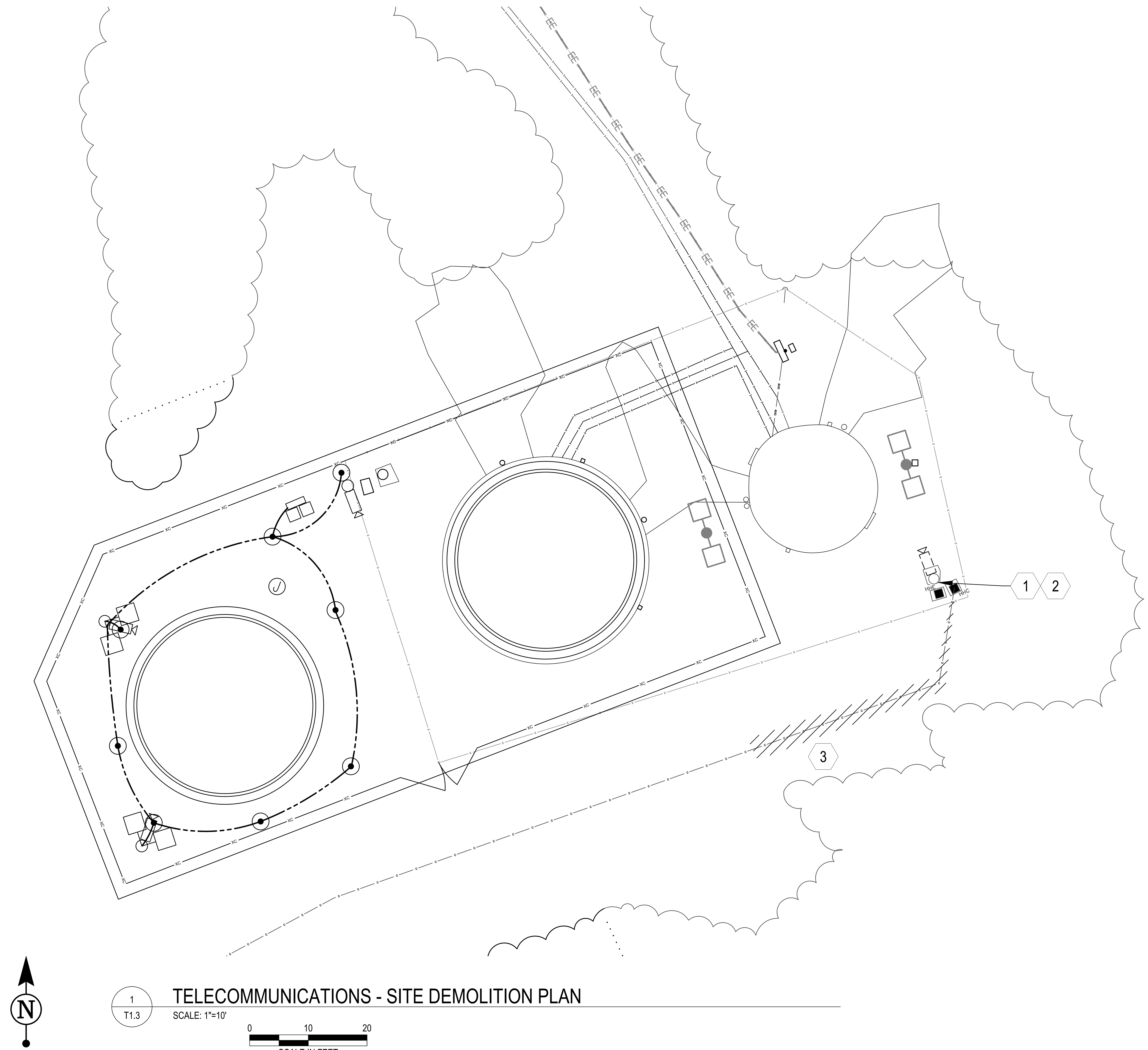

1
T1.3

TELECOMMUNICATIONS - SITE DEMOLITION PLAN

SCALE: 1"=10'

0 10 20
SCALE IN FEET

GENERAL NOTES:

A. COORDINATE ALL REMOVAL WORK WITH ALL OTHER CONTRACTORS.

B. ALL EXISTING EQUIPMENT TO REMAIN OPERATIONAL UNTIL NEW EQUIPMENT IS OPERATIONAL.

C. FIELD VERIFY ALL ELECTRICAL EQUIPMENT LOCATIONS PRIOR TO REMOVAL AND IDENTIFY ANY ISSUES NOT SHOWN ON PLANS.

KEYNOTES:

1. DES TO DISCONNECT EXISTING FIELD CONDUCTORS FROM CAMERA CABINET MOUNTED ON CAMERA POLE.

2. DEMOLISH CAMERA POLE AND BASE. SALVAGE CAMERA ENCLOSURE FOR RELOCATION. DEMOLISH ASSOCIATED COMMUNICATION HANDHOLE IN THE GROUND.

3. PARTIALLY DEMOLISH EXISTING COMMUNICATIONS CONDUIT AS SHOWN. PROTECT CONDUCTORS FOR RE-USE.

DPW
FORT MCCOY, WI

MARK	MOD REQUEST # - DESCRIPTION	DATE	MOD #

SEH – TEPA ES JV, LLC
PHONE: 920.380.2830
329 JAY ST, SUITE 301
LA CROSSE, WI 54601

FORT McCOY
REPAIR SOUTH POST
RESERVOIRS
FORT McCOY, WISCONSIN

Date: 3/5/2026	Designed by: JAM
Rev.	Dwn by: JLR
	Ckd by: JPC
Work Order No 1612	Reviewed by:
Project Number 1503	Submitted by: DPW

FORT McCOY
DIRECTORATE OF PUBLIC WORKS
2171 SOUTH 8TH AVE.
FORT MC COY, WI 54656

TELECOMMUNICATIONS
SITE DEMOLITION PLAN
PHASE 2A

SHEET NUMBER:
T1.3

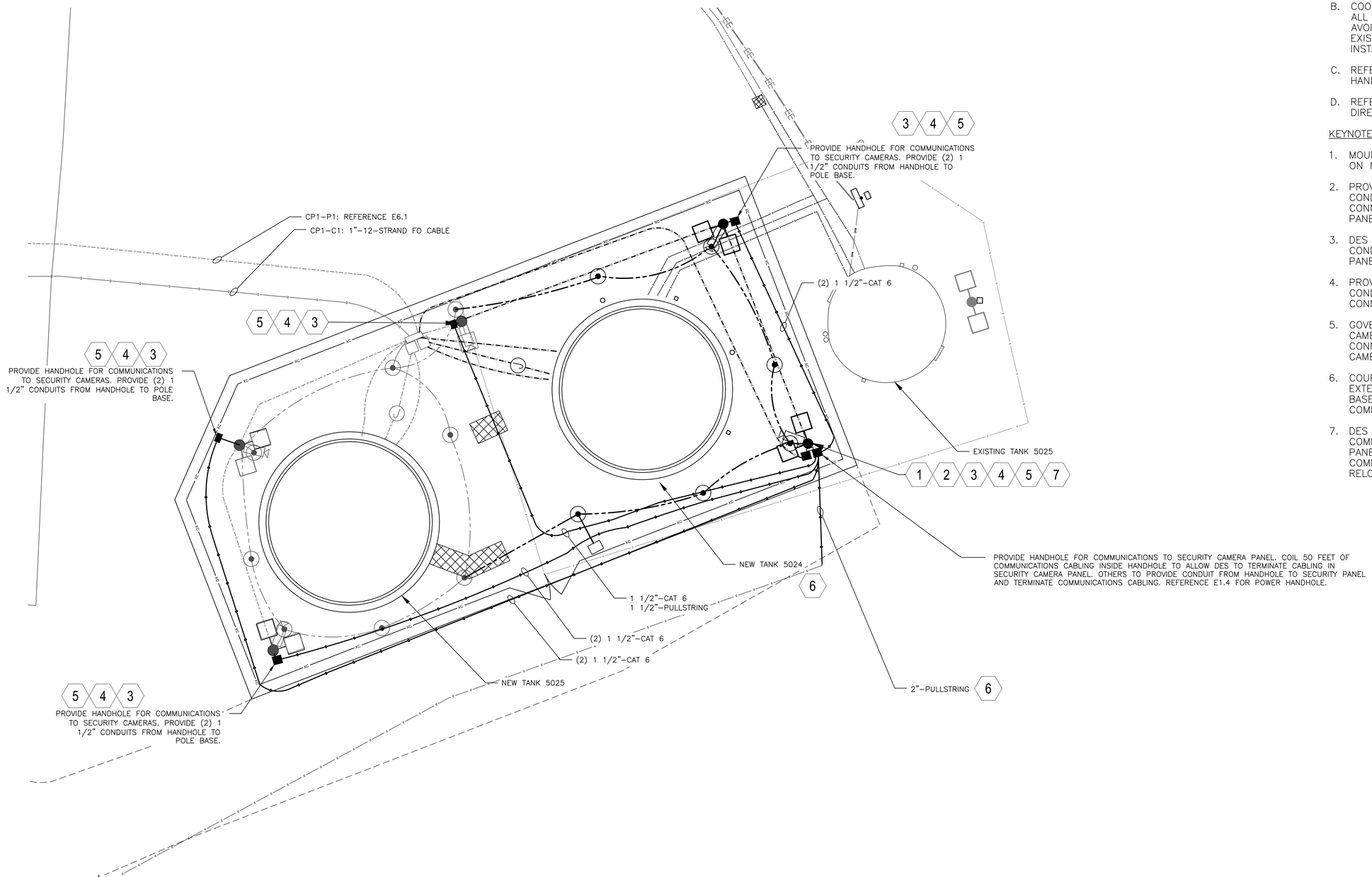

1
T1.4

TELECOMMUNICATIONS - SITE PLAN

SCALE: 1"=20'

0 20 40
SCALE IN FEET

GENERAL NOTES:

A. CONDUIT ROUTING IS SHOWN DIAGRAMMATICALLY FOR CLARITY. ROUTE ALL CONDUITS WITHIN THE SAME TRENCH AND WITHIN THE FENCELINE UNLESS NOTED OTHERWISE.

B. COORDINATE CONDUIT ROUTING WITH ALL OTHER TRADES AND UTILITIES TO AVOID CONFLICTS WITH NEW WORK AND EXISTING CONDITIONS PRIOR TO INSTALLATION.

C. REFERENCE DETAIL ON SHEET T5.1 FOR HANDHOLE INSTALLATION DETAILS.

D. REFERENCE DETAIL ON SHEET T5.1 FOR DIRECT BURIED CONDUIT DETAILS.

KEYNOTES:

1. MOUNT EXISTING CAMERA ENCLOSURE ON NEW POLE.
2. PROVIDE 12 FEET OF COILED CONDUCTORS TO ALLOW FINAL CONNECTION INSIDE EXISTING CAMERA PANEL.
3. DES TO MAKE FINAL CONNECTIONS OF CONDUCTORS TO CAMERA OR CAMERA PANEL.
4. PROVIDE 30 FEET (EACH) OF COILED CONDUCTORS IN POLE BASE TO ALLOW CONNECTION TO CAMERAS.
5. GOVERNMENT TO FURNISH AND INSTALL CAMERAS ON POLE AND MAKE FINAL CONNECTIONS OF CONDUCTORS TO CAMERA OR CAMERA PANEL.
6. COUPLE TO EXISTING CONDUIT AND EXTEND TO COMMUNICATIONS HANDHOLE BASE. PROTECT EXISTING COMMUNICATIONS CONDUCTORS.
7. DES TO PROVIDE CONDUIT FROM COMMUNICATIONS HANDHOLE TO CAMERA PANEL AND TO TERMINATE EXISTING COMMUNICATIONS CONDUCTORS IN RELOCATED CAMERA PANEL.

DPW
FORT MCCOY, WI

MARK	MOD REQUEST # - DESCRIPTION	DATE	MOD #

SEH – TEPA ES JV, LLC
PHONE: 920.380.2830
329 JAY ST, SUITE 301
LA CROSSE, WI 54601

FORT McCOY
REPAIR SOUTH POST
RESERVOIRS
FORT McCOY, WISCONSIN

Designed by: JAM
Date: 3/5/2026
Drwn by: JLR
Ckd by: JPC
Rev:
Reviewed by:
Work Order No. 1612
Submitted by: DPW
Project Number 1503

FORT McCOY
DIRECTORATE OF PUBLIC WORKS
2171 SOUTH 5TH AVE.
FORT MC COY, WI 54656

TELECOMMUNICATIONS
SITE PLAN
PHASE 2B

SHEET NUMBER:
T1.4

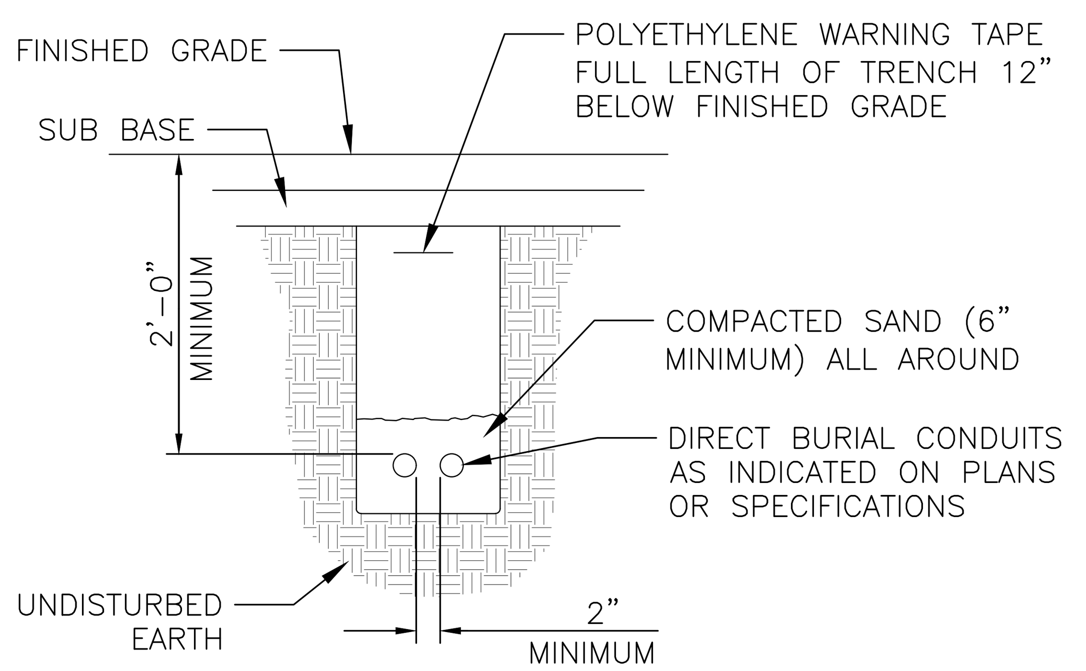

NOTES:

1. BACKFILL OF SELECT COMMON FILL COMPACTED IN LIFTS OF 6" (DEPTH VARIES)

1 DIRECT BURIED CONDUIT

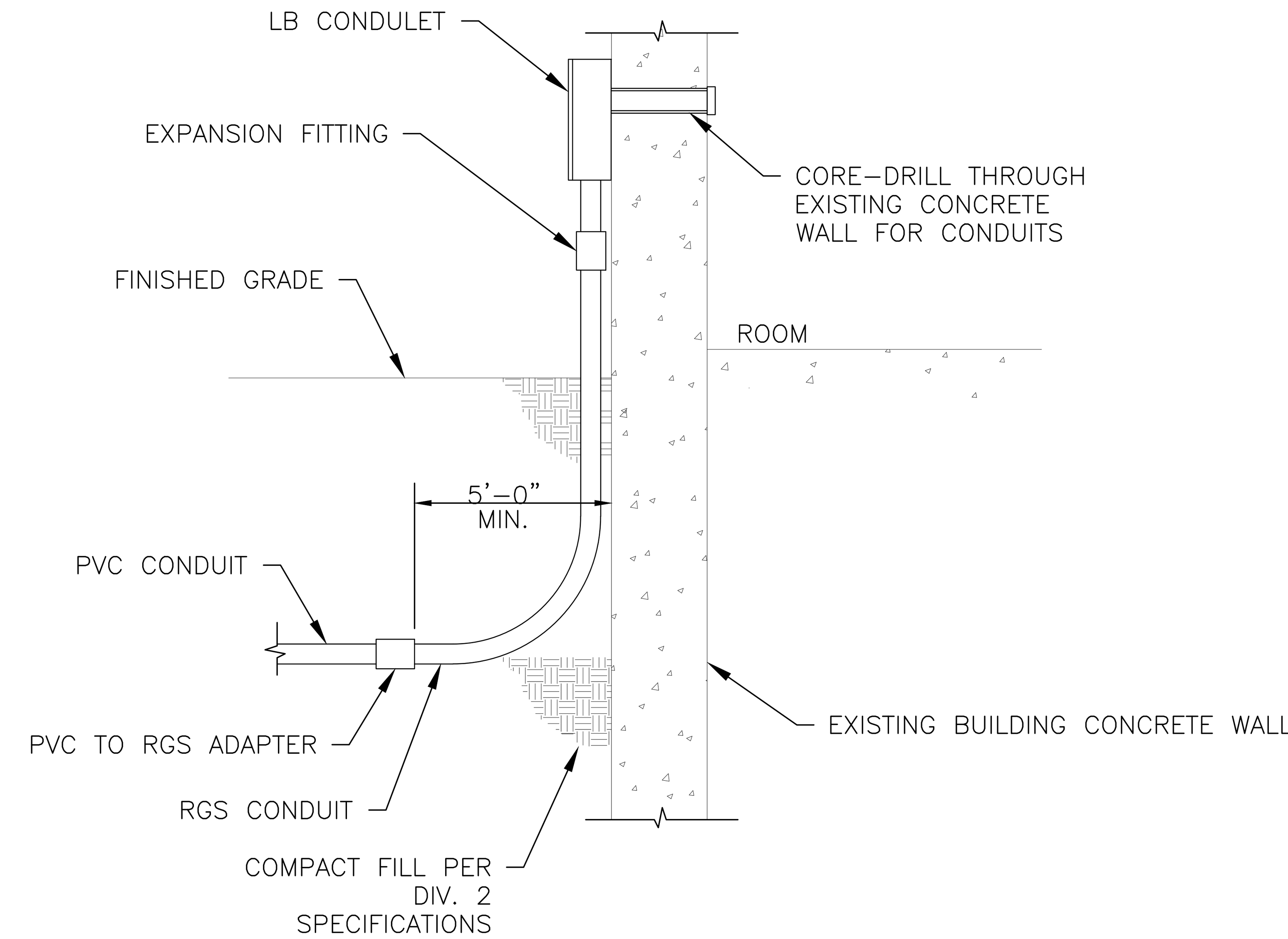

2 BUILDING CONDUIT ENTRY

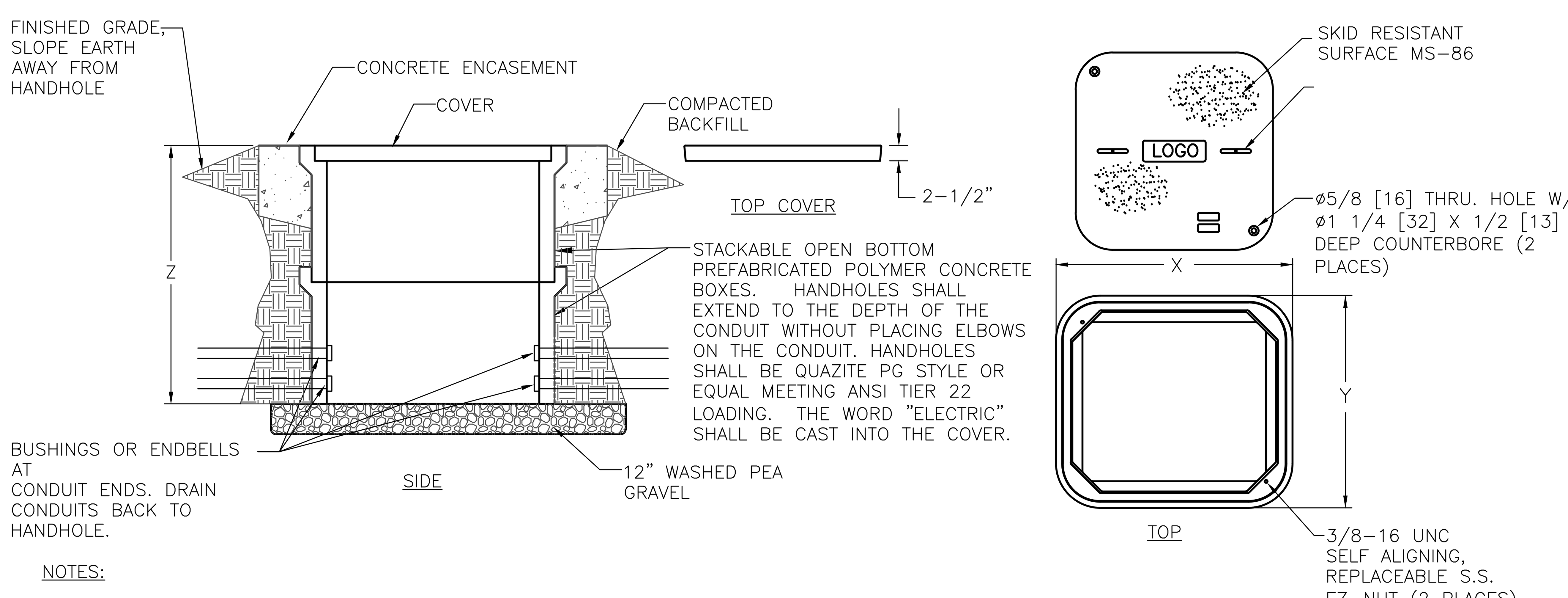

NOTES:

1. ALL HANDHOLES SHALL BE INSTALLED AT DEPTH TO SIT FLUSH WITH FINAL GRADE. DEPTH TO BE 30" OR AS REQUIRED. MINIMUM SIZE HANDHOLES ARE SHOWN, PROVIDE LARGER BOXES AS REQUIRED.
2. ALL HANDHOLES SHALL BE UL LISTED AND BE SUITABLE FOR ANSI TIER 22 LOADING. FOR AREAS OF DELIBERATE HEAVY VEHICLE TRAFFIC, HANDHOLES SHALL BE SUITABLE FOR AASHTO H-20 LOADING.
3. ALL HANDHOLES SHALL BE EQUAL TO QUAZITE SERIES PG OR APPROVED EQUAL.
4. ALL HANDHOLES SHALL BE GASKETED, PRECAST CONCRETE OR POLYMER COMPOSITE SPLICE BOXES SUITABLE FOR POWER AND CONTROL WIRING. PROVIDE ALL HANDHOLES WITH BASES AND STAINLESS STEEL HEX BOLTS.
5. E.C. SHALL PROVIDE CRUSHED STONE AT BASE OF HANDHOLE.
6. ALL HANDHOLES TO BE SIZED PER NEC REQUIREMENTS FOR THE CONDUITS ENTERING THEM. MINIMUM SIZE SHALL BE 36"W X 24"L X 30"D UNLESS NOTED OTHERWISE ON THE PLAN SHEETS.
7. PROVIDE COVER ENGRAVING; "COMMUNICATION".

3 HANDHOLE DETAIL

DPW
FORT MCCOY, WI

MARK	MOD REQUEST # - DESCRIPTION	DATE	MOD #

SEH – TEPA ES JV, LLC
PHONE: 920.380.2830
329 JAY ST, SUITE 301
LA CROSSE, WI 54601

FORT McCOY
REPAIR SOUTH POST RESERVOIRS
FORT McCOY, WISCONSIN

Date: 3/5/2026
Rev.
Work Order No 1612
Project Number 1503
Designed by: JAM
Ckd by: JPC
Dwn by: JLR
Reviewed by:
Submitted by: DPW

FORT McCOY
DIRECTORATE OF PUBLIC WORKS
2171 SOUTH 8TH AVE.
FORT MC COY, WI 54656

TELECOMMUNICATIONS DETAILS

SHEET NUMBER:
T5.1
SHEET 46 of 46